SRT XD Mower
Parts Manual 2021

Table of Contents

Front Fork Assembly 3

Brake, Floorboard, and Height Indicator Assembly 4-7

Battery and Seat Suspension Assembly 8-9

Drive Arm Assemblies 10-11

Seat Frame and Pump Idler Assemblies 12-15

Gas Tank Assembly 16-17

Transmission Assembly 18-19

54” Deck Assembly 20-23

61” Deck Assembly 24-27

72” Deck Assembly 28-31

Deck Chute Assembly 32

Spindle Assembly 33

Kawasaki FXT1000 Carbureted Engine Assembly 34

37 HP Vanguard Engine with Oil Guard Assembly 35-36

28 HP Vanguard Engine Assembly 37

Kawasaki FXT1000 EFI Engine Assembly 38

Decals 39

Front Fork Assembly			
ITEM	QTY	PART NUMBER	DESCRIPTION
1	1	426-0006-00	Mower Caster Shaft Washer
2	1	425-0011-00	Caster Fork Shaft Bearing Spacer
3	1	418-0003-00	1/2-13 X 8-1/2 HEX C/S GR 5 ZINC YELLOW
4	1	413-0002-00	1/2-13 NYLON INSERT FLANGE LOCKNUT ZC YELLOW
5	1	425-0010-00	Mower Caster Fork Wheel Spacer
6	1	418-0006-00	1/2-20 X 1-1/4 HEX C/S GR 5 ZINC
7	2	410-0014-00	Mower Caster Wheel Bearing
8	2	410-0006-00	1" INSERT BEARING
9	1	423-0001-00	RT&SRT Caster Wheel Fork 2018
10	1	419-0025-00	Front Fork Caster Top Washer
11	1	437-0019-00	RT&SRT Mower Caster Wheel Shaft 2018
12	1	413-0063-00	1”-8 FIN HEX JAM NUT ZC
13	1	419-0024-00	1” L/W MED SPLIT ZC
14	1	422-0042-00	Spartan Radial Tire Wheel Assembly 2018
15	1	419-0003-00	1/2 FENDER WASHER 1-1/4" OD ZINC

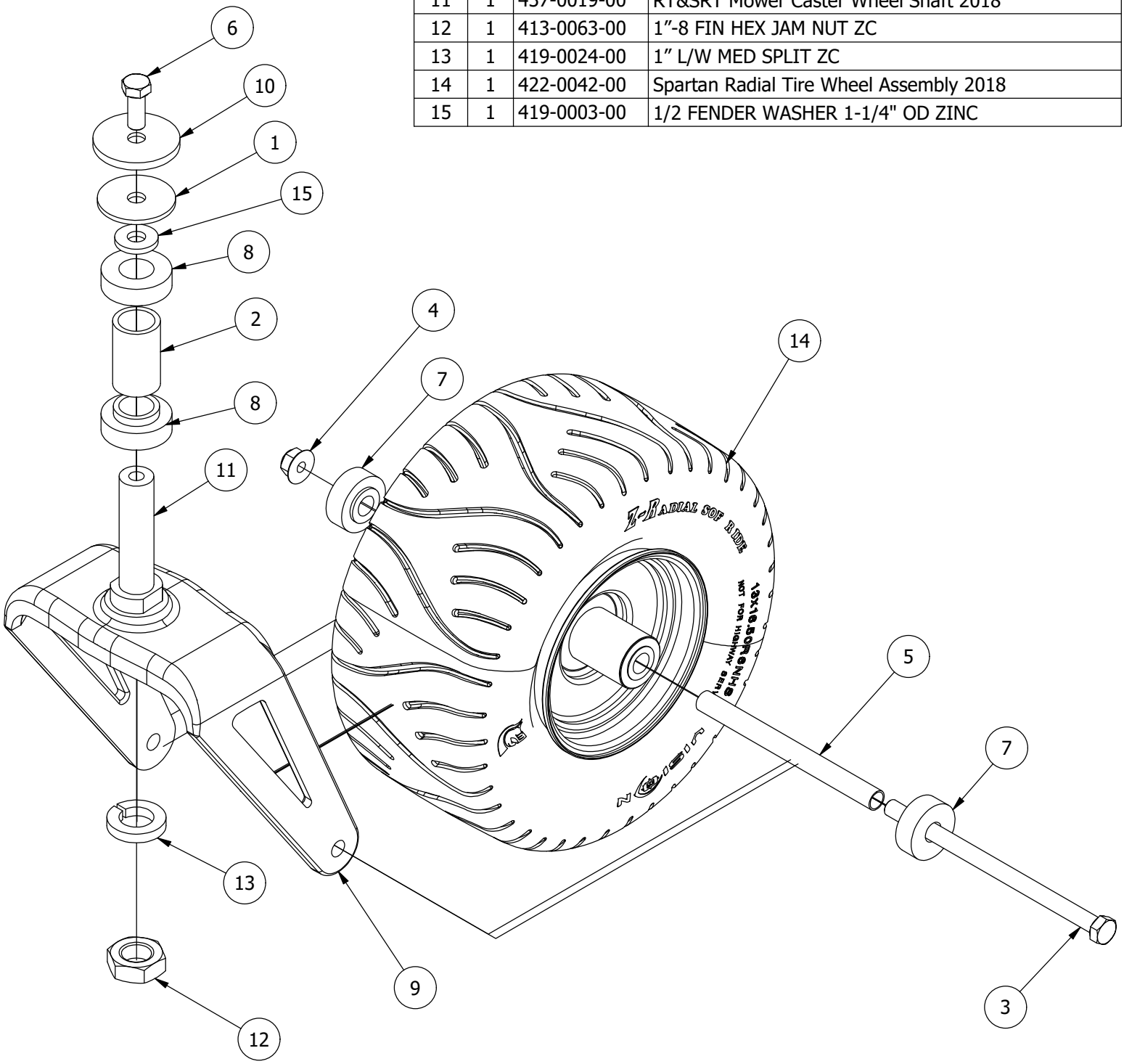

Brake, Floorboard, and Height Indicator Assembly

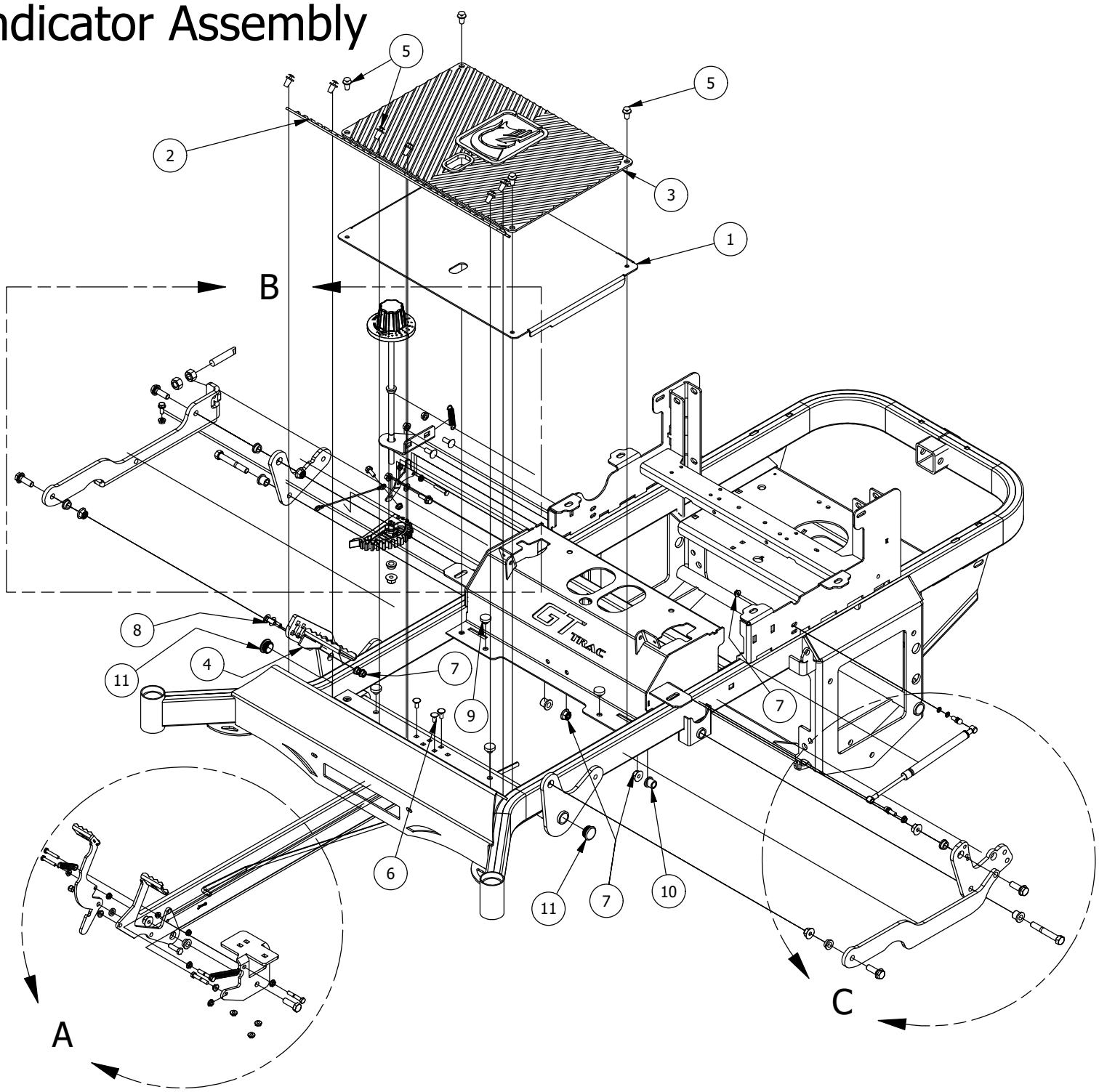

Parts List			
ITEM	QTY	PART NUMBER	DESCRIPTION
1	1	439-0007-00	Mower Floorboard
2	1	481-0005-00	2017 Mower Rubber Foot Rest Mat Except for RZ
3	1	481-0006-00	2017 Mower Logo Floor Mat Except for RZ
4	1	439-0059-00	Mower Deck Height Foot Pedal
5	10	414-0002-00	8MM PUSH TYPE RETAINER NYLON BLACK
6	3	418-0008-00	5/16-18 X 3/4 CARRIAGE BOLT ZINC
7	8	413-0002-00	1/2-13 NYLON INSERT FLANGE LOCKNUT ZC YELLOW
8	2	418-0045-00	3/8-16 X 1 Carriage Bolt Zinc Yellow
9	4	429-0002-00	Push-In Rubber Bumper, Mower Floor
10	4	410-0068-00	.502 ID X .753 OD X .75 OAL X1 FL OD X .125 FL BUSHING
11	2	414-0015-00	1-1/4” Round Tube Plug

DETAIL A

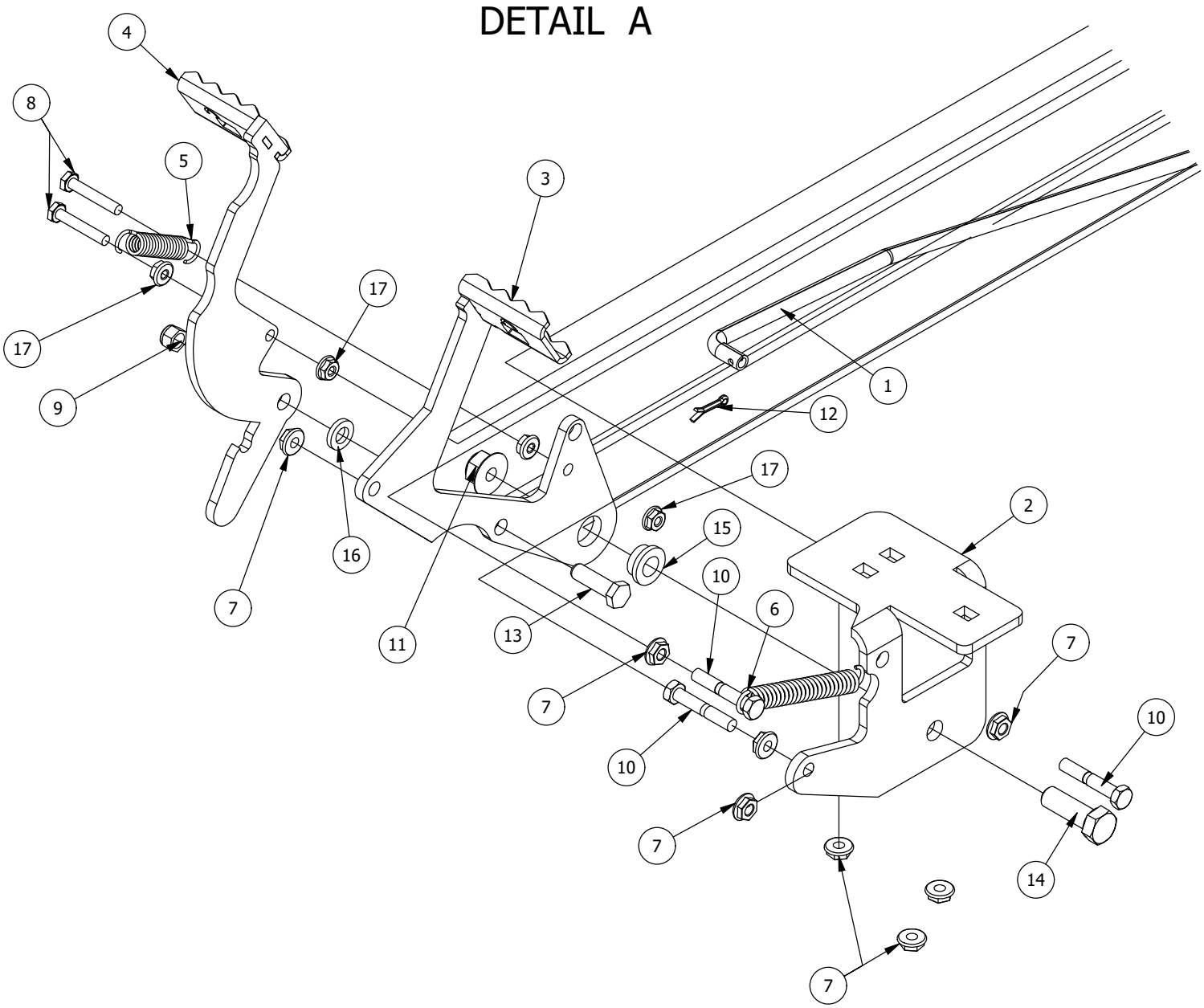

Detail A Parts List			
ITEM	QTY	PART NUMBER	DESCRIPTION
1	1	435-0004-00	Mower Brake Linkage
2	1	439-0009-00	Mower Frame Brake Mounting Bracket
3	1	490-0016-00	Mower Brake Lock Lever Assembly
4	1	490-0017-00	Mower Brake Unlock Lever Assembly
5	2	434-0003-00	Brake Pedal Release Spring
6	1	434-0015-00	Brake Pedal Release Spring
7	11	413-0006-00	5/16-18 HEX FLANGE NUT W/SERR ZINC
8	3	418-0029-00	1/4-20 X 1-1/4 HEX C/S GR 2 ZINC
9	1	413-0013-00	3/8-16 NYLON INSERT FLANGE LOCKNUT ZINC
10	3	418-0027-00	5/16-18 X 1-3/4 HEX C/S GR 2 ZINC
11	8	413-0002-00	1/2-13 NYLON INSERT FLANGE LOCKNUT ZC YELLOW
12	1	420-0001-00	1/8 X 3/4 COTTER PIN ZINC
13	1	418-0030-00	3/8-16 X 1-1/4 HEX C/S GR 2 ZINC
14	1	418-0028-00	1/2-13 X 1-1/2 HEX C/S GR 2 ZINC
15	7	410-0009-00	1/2" ID X 3/4" OD X 3/8" LENGTH FLANGE BUSHING
16	1	419-0015-00	3/8" ID X 3/4" OD X 1/8" THK BRONZE WASHER
17	6	413-0012-00	1/4-20 HEX FLANGE NUT W/SERRATIONS ZC YELLOW

DETAIL B

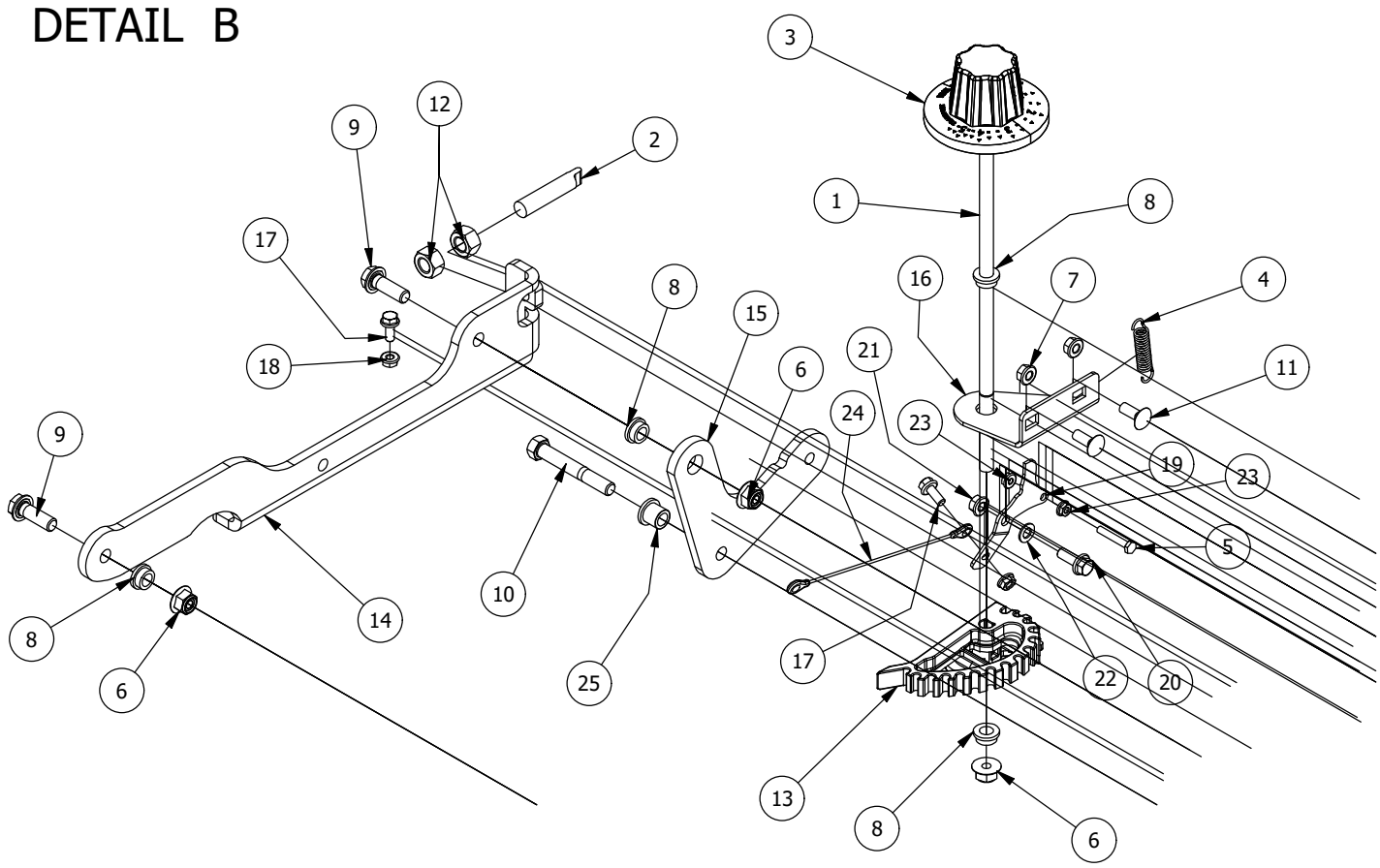

Detail B			
ITEM	QTY	PART NUMBER	DESCRIPTION
1	1	437-0003-00	Mower Deck Height Selector Shaft
2	1	444-0001-00	Mower HEIGHT SELECTOR CAM PIN
3	1	445-0002-00	Mower Deck Height Control Knob
4	2	434-0003-00	Brake Pedal Release Spring
5	3	418-0029-00	1/4-20 X 1-1/4 HEX C/S GR 2 ZINC
6	8	413-0002-00	1/2-13 NYLON INSERT FLANGE LOCKNUT ZC YELLOW
7	4	413-0004-00	3/8-16 HEX FLANGE NUT W/SERR ZINC
8	7	410-0009-00	1/2" ID X 3/4" OD X 3/8" LENGTH FLANGE BUSHING
9	4	418-0047-00	1/2-13 X 1-1/2 HEX FLANGE BOLT GR 8 ZINC YELLOW
10	2	418-0042-00	1/2-13 X 3-1/2 HEX C/S GR 5 ZINC YELLOW
11	2	418-0053-00	3/8-16 X 1 CARRIAGE BOLT ZINC YELLOW
12	2	413-0048-00	5/8-11 HEX NUT ZINC YELLOW
13	1	490-0045-00	Mower Deck Height Cam Casting
14	1	439-0698-00	2021 Deck Height Arm Right Link
15	1	431-0004-00	Deck Height Brkt Right side
16	1	439-0712-00	2021 Mower Deck Height Indicator Rod Bracket
17	2	418-0048-00	5/16-18 X 3/4 HEX FLANGE BOLT GR 8 ZC YELLOW
18	1	413-0022-00	5/16-18 HEX FLANGE NUT W/SERR ZINC YELLOW
19	1	439-0711-00	2021 Deck Height Control Shaft Spring Bracket
20	1	418-0040-00	3/8-16 X 1 HEX FLANGE BOLT GR 8 ZC YELLOW
21	1	413-0029-00	3/8-16 NYLON INSERT FLANGE L/NUT ZC YELLOW
22	1	410-0011-00	3/8 X 3/4 Bronze Washer
23	6	413-0012-00	1/4-20 HEX FLANGE NUT W/SERRATIONS ZC YELLOW
24	1	414-0037-00	Height Indicator Cable
25	4	410-0068-00	.502 ID X .753 OD X .75 OAL X1 FL OD X .125 FL BUSHING
26	2	414-0015-00	1-1/4” Round Tube Plug

DETAIL C

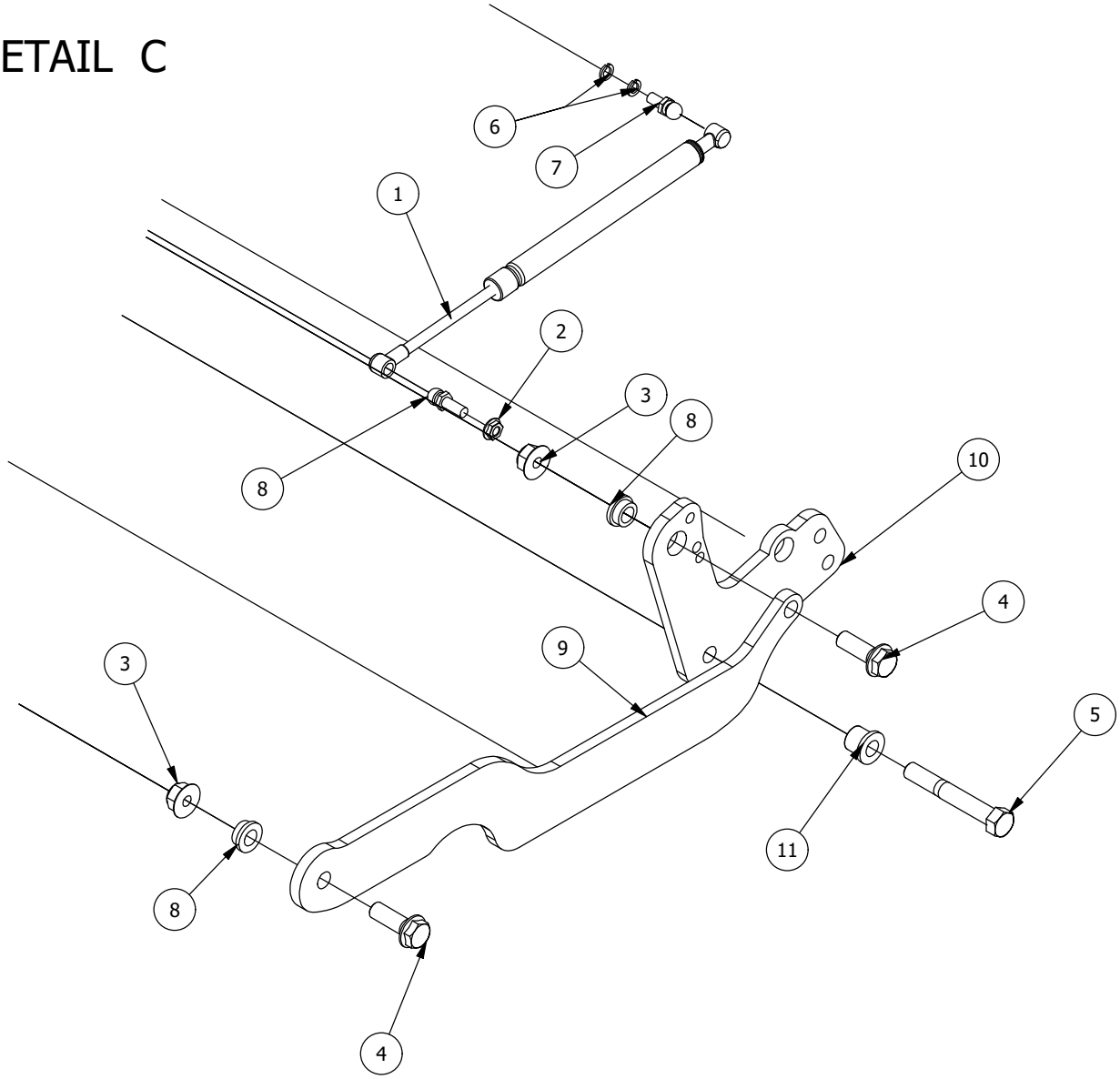

Detail C Parts List			
ITEM	QTY	PART NUMBER	DESCRIPTION
1	1	434-0001-00	Deck Gas Spring
2	11	413-0006-00	5/16-18 HEX FLANGE NUT W/SERR ZINC
3	8	413-0002-00	1/2-13 NYLON INSERT FLANGE LOCKNUT ZC YELLOW
4	4	418-0047-00	1/2-13 X 1-1/2 HEX FLANGE BOLT GR 8 ZINC YELLOW
5	2	418-0042-00	1/2-13 X 3-1/2 HEX C/S GR 5 ZINC YELLOW
6	2	419-0009-00	5/16 SPLIT LOCKWASHER ZINC
7	1	487-0005-00	Control Arm Damper Ball Stud
8	1	487-0008-00	Control Arm Damper Ball Stud 3/4" Thread
9	1	435-0009-00	Mower Deck Height Left Link Arm
10	1	431-0005-00	Deck Height Brkt Left Actuator side
11	4	410-0068-00	.502 ID X .753 OD X .75 OAL X1 FL OD X .125 FL BUSHING
12	2	414-0015-00	1-1/4” Round Tube Plug

Battery and Seat Suspension Assembly

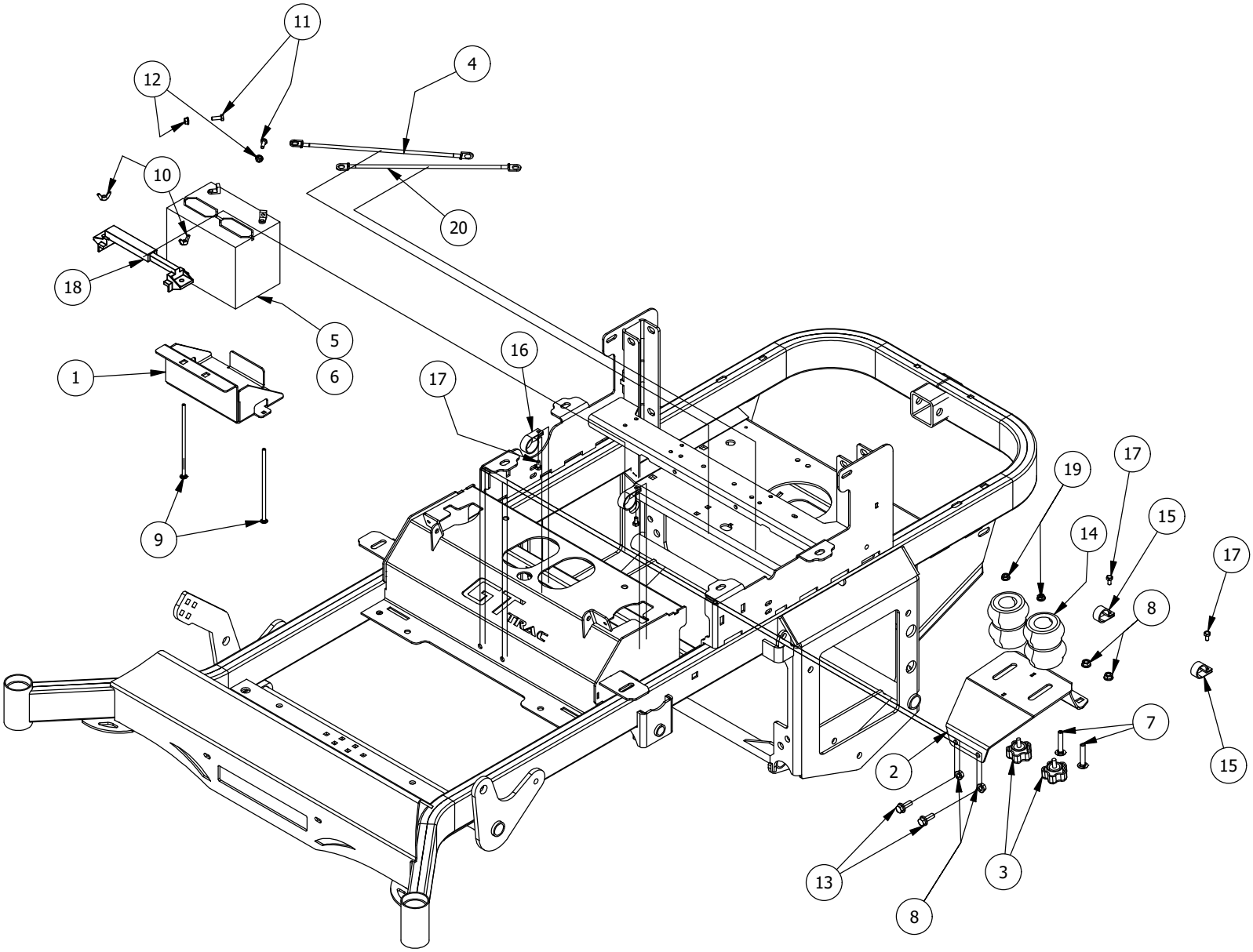

Battery and Seat Suspension Assembly			
ITEM	QTY	PART NUMBER	DESCRIPTION
1	1	439-0008-00	Mower Battery Box
2	1	490-0021-00	Mower Suspension Seat Bracket Assembly
3	2	445-0001-00	Lobed Knob w/ 5/16"-18 X .750" Stud
4	1	486-0017-00	Mower Negative Battery Cable 28" long
5	1	468-1004-00	12-V Mower Starter Battery
6	1	468-0001-00	Mower Diesel Start Battery 350CCA
7	2	418-0033-00	3/8-16 X 2 CARRIAGE BOLT ZINC
8	4	413-0004-00	3/8-16 HEX FLANGE NUT W/SERR ZINC
9	2	418-0034-00	1/4-20 X 7 CARRIAGE BOLT ZINC
10	2	413-0025-00	1/4-20 WING NUT ZINC
11	2	418-0035-00	1/4-20 X 3/4 HEX C/S GR 2 ZINC
12	2	413-0026-00	1/4-20 NYLON INSERT FLANGE L/NUT ZINC
13	2	418-0040-00	3/8-16 X 1 HEX FLANGE BOLT GR 8 ZC YELLOW
14	2	487-0003-00	SRT Rear Suspension Elastomer
15	2	472-0002-00	1/2" CUSHIONED LOOP CLAMP
16	2	472-0001-00	1-1/4" CHUSHIONED LOOP CLAMP BLACK
17	4	418-0025-00	1/4-20 X 1/2 HWH SLOT TYPE F TCS ZINC
18	1	443-0001-00	Battery Hold Down
19	2	413-0027-00	5/16-18 NYLON INSERT FLANGE LOCKNUT ZC YELLOW
20	1	486-0016-00	Mower Positive Battery Cable 25" long

Drive Arm Assemblies

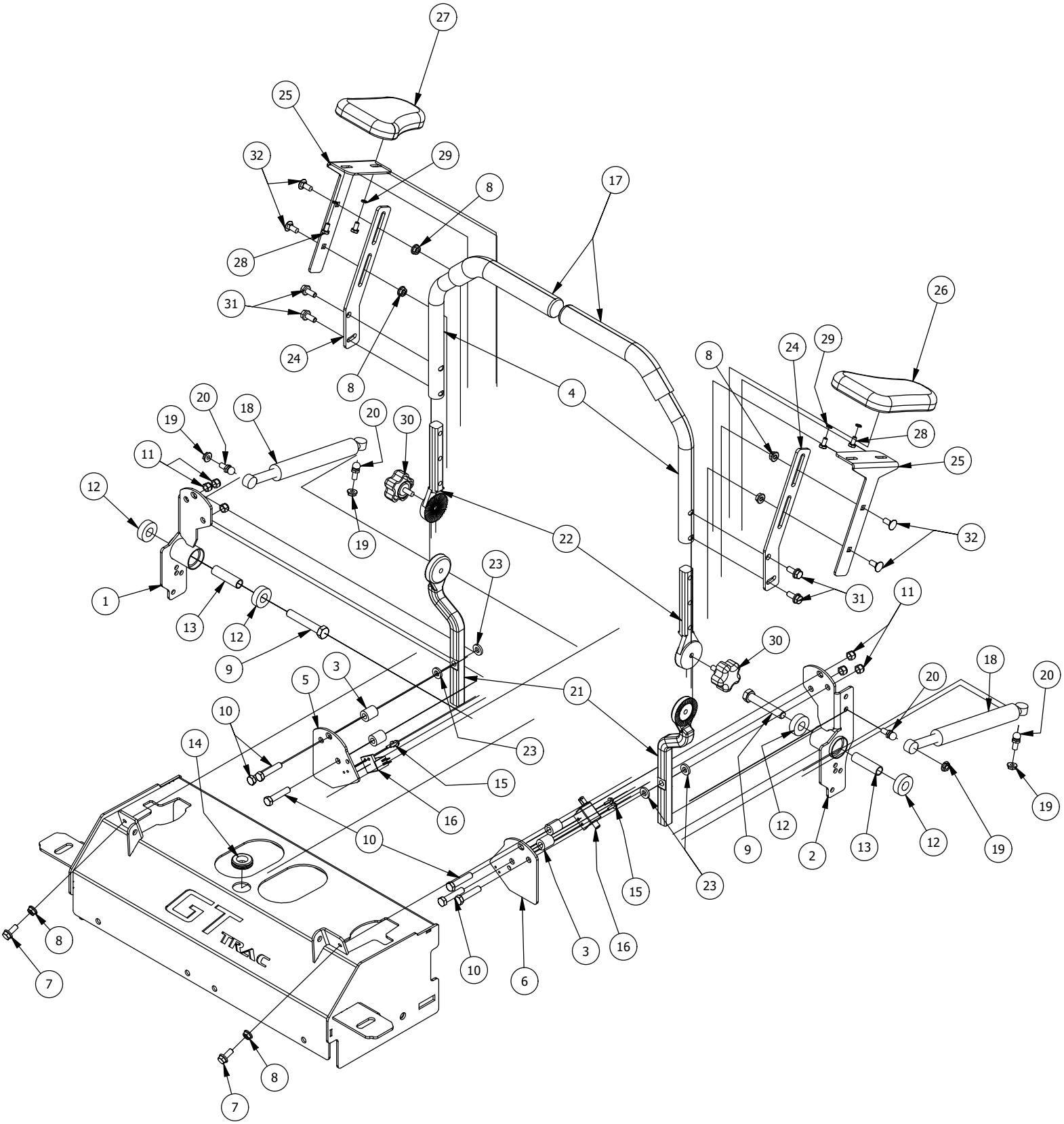

Drive Arm Assemblies			
ITEM	QTY	PART NUMBER	DESCRIPTION
1	1	490-0013-00	Mower Right Drive Arm Bracket Assembly
2	1	490-0012-00	Mower Left Drive Arm Bracket Assembly
3	4	425-0003-00	Mower Drive Arm Spacer
4	2	403-0020-00	Mower Drive Handle Tube
5	1	426-0003-00	Mower Right Control Arm Limit Switch Plate
6	1	426-0002-00	Mower Left Control Arm Limit Switch Plate
7	2	418-0049-00	5/16-18 X 3/4 IND HWH TRI LOB ZINC
8	6	413-0022-00	5/16-18 HEX FLANGE NUT W/SERR ZINC YELLOW
9	2	418-0050-00	1/2-13 X 3 HEX C/S GR 5 ZINC
10	6	418-0051-00	3/8-16 X 1-3/4 HEX C/S GR 2 ZINC
11	6	413-0013-00	3/8-16 NYLON INSERT FLANGE LOCKNUT ZINC
12	4	410-0005-00	5/8" ID X 1-3/8" OD X 7/16" THK BEARING
13	2	425-0004-00	Mower Drive Arm Hub & Deck Lift Arm Spacer
14	1	419-0008-00	3/4" ID X FOR 1-3/16" HOLE FOR 11 GA RUBBER GROMMIT
15	4	418-0032-00	8-32 X 1/2 IND. HWH SLOT TYPE F TCS ZINC
16	2	486-0030-00	Safety Switch
17	2	484-0001-00	Handle Grip
18	2	487-0001-00	Control Arm Damper
19	4	413-0024-00	5/16-18 HEX SERRATED LARGE FLANGE L/NUT ZC
20	4	487-0005-00	Control Arm Damper Ball Stud
21	2	431-0002-00	Height/Pitch Adjustable Lower Drive Arm
22	2	431-0003-00	Height/Pitch Adjustable Upper Drive Arm
23	4	413-0052-00	3/8 ID X 3/4 OD X .125 THK BRONZE WASHER
24	2	439-0010-00	Mower Drive Arm Pad Tube Mounting bracket
25	2	439-0011-00	Mower Drive Arm Pad Mount bracket
26	1	471-0028-00	2020 Mower Drive Arm Support Pad Left
27	1	471-0029-00	2020 Mower Drive Arm Support Pad Right
28	4	418-0056-00	1/4-20 X 1/2 HEX C/S GR 2 ZINC
29	4	419-0012-00	1/4 EXT TOOTH LOCKWASHER ZINC
30	2	445-0001-00	Lobed Knob w/ 5/16"-18 X .750" Stud
31	4	418-0048-00	5/16-18 X 3/4 HEX FLANGE BOLT GR 8 ZC YELLOW
32	4	418-0063-00	5/16-18 X 3/4 CARRIAGE BOLT ZINC YELLOW

Seat Frame and Pump Idler Assemblies

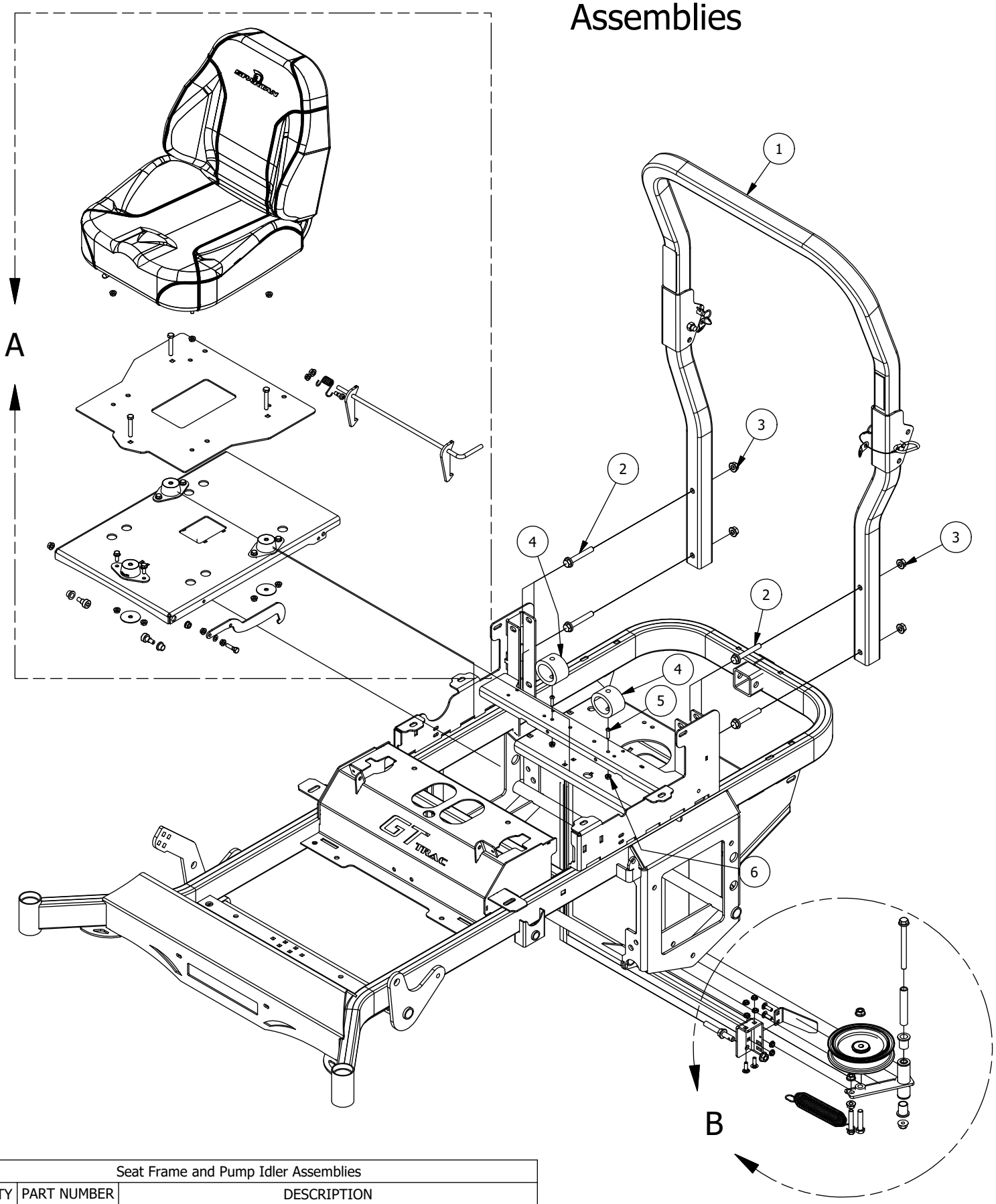

Seat Frame and Pump Idler Assemblies			
ITEM	QTY	PART NUMBER	DESCRIPTION
1	1	490-0018-00	Mower Pump Idler Pulley Arm Assembly
2	2	410-0007-00	3/4" ID X 15/16" OD X 1-1/8" LENGTH FLANGE BUSHING
3	1	413-0002-00	1/2-13 NYLON INSERT FLANGE LOCKNUT ZC YELLOW
4	1	425-0006-00	Mower Inner Idler Spacer
5	1	418-0012-00	1/2-13 X 2-1/4 HEX C/S GR 5 ZINC
6	2	413-0026-00	1/4-20 NYLON INSERT FLANGE L/NUT ZINC

DETAIL A

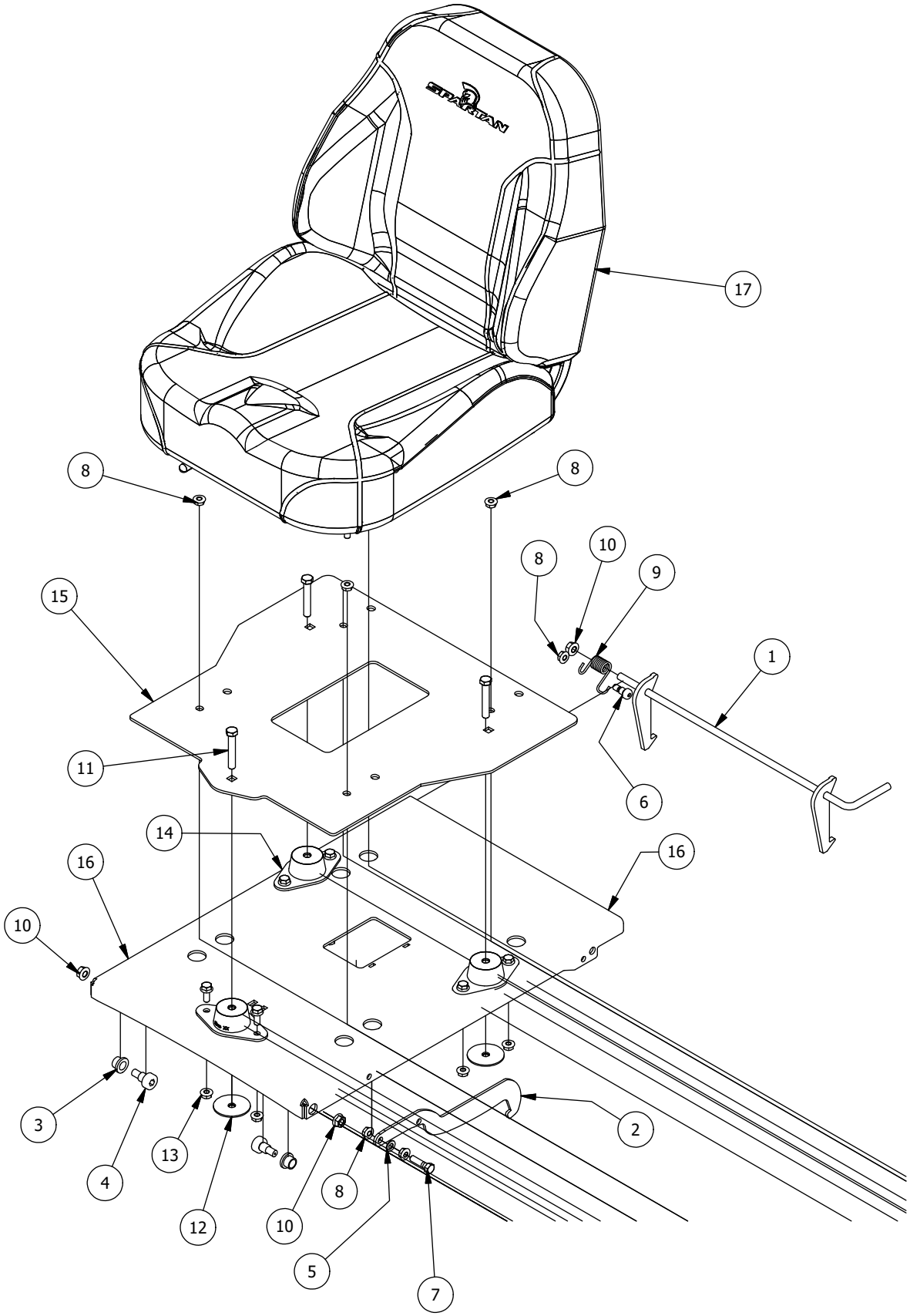

Parts List			
ITEM	QTY	PART NUMBER	DESCRIPTION
1	1	490-0011-00	Mower Seat Latch Release Assembly
2	1	439-0065-00	Mower Seat Latch Hook
3	2	410-0010-00	1/2" ID X 5/8" OD X 1/2" LENGTH FLANGE BUSHING
4	2	418-0038-00	1/2 X 1/2 SOCKET SHOULDER BOLT ZC YELLOW
5	1	419-0016-00	5/16" ID X 5/8" OD X 1/16" THK BRONZE WASHER
6	1	418-0037-00	3/8 X 3/8 SOCKET SHOULDER BOLT ZC YELLOW
7	1	418-0036-00	5/16-18 X 1-1/4 HEX TAP BOLT ZINC GR8
8	7	413-0019-00	5/16-18 NYLON INSERT FLANGE L/NUT ZINC
9	1	434-0004-00	Seat Latch Spring
10	6	413-0029-00	3/8-16 NYLON INSERT FLANGE L/NUT ZC YELLOW
11	3	418-0107-00	3/8-16 X 2-1/4 HEX FLANGE BOLT GR 8 ZC YELLOW
12	3	419-0022-00	3/8 X 2” OD FENDER WASHER ZC YELLOW
13	6	413-0022-00	5/16-18 HEX FLANGE NUT W/SERR ZINC YELLOW
14	2	487-0007-00	Floating Seat Damper-Stiffer
15	1	426-0231-00	2019 Upgrade Seat Plate
16	1	426-0232-00	2019 Upgrade Seat Base Plate
17	1	471-0015-00	2019 Full Suspension seat
6	1	433-0014-00	6-3/4” Idler Pulley, 15/16” Spacer Assembly

DETAIL B

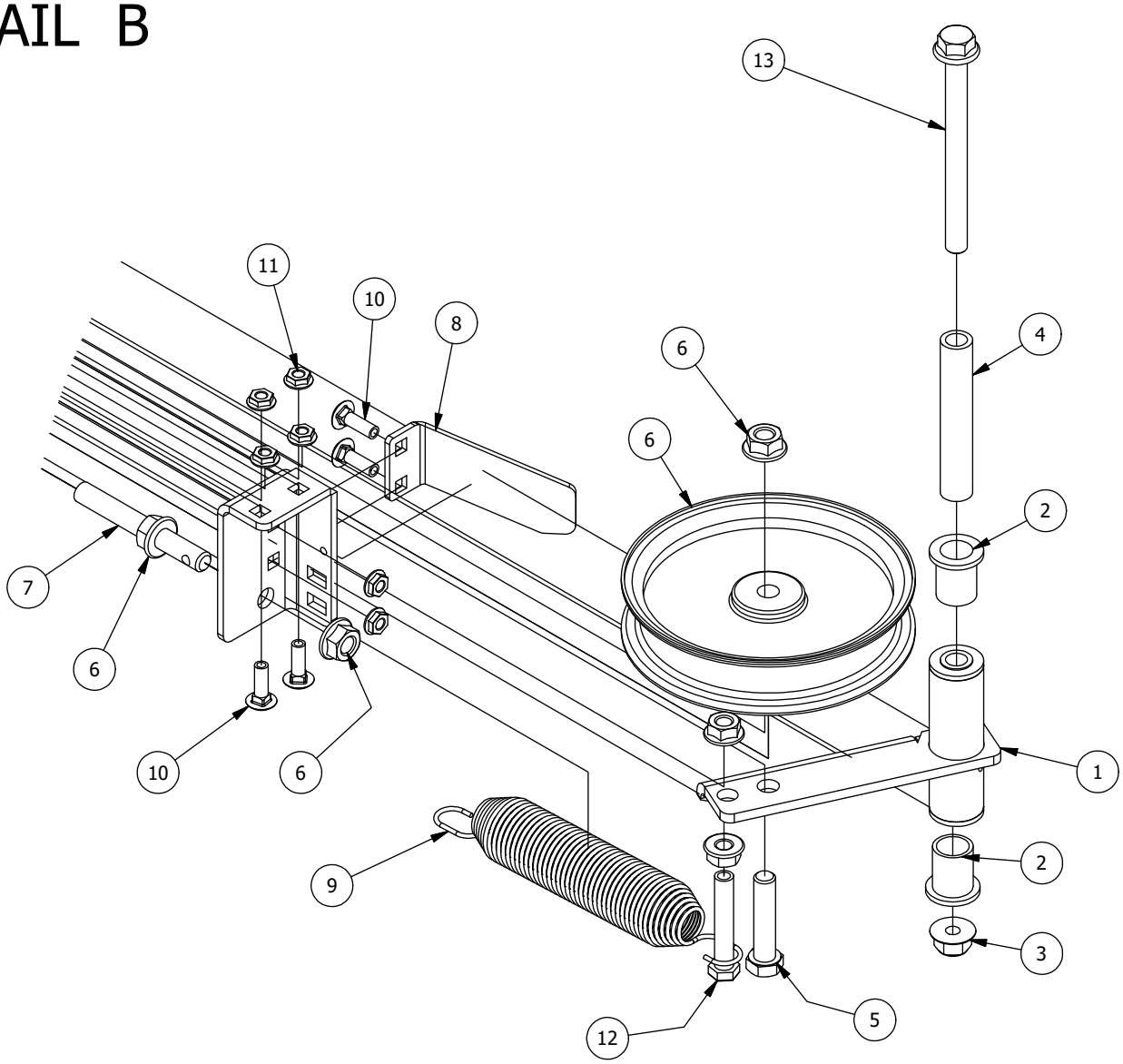

Detail B Parts List			
ITEM	QTY	PART NUMBER	DESCRIPTION
1	1	490-0018-00	Mower Pump Idler Pulley Arm Assembly
2	2	410-0007-00	3/4" ID X 15/16" OD X 1-1/8" LENGTH FLANGE BUSHING
3	1	413-0002-00	1/2-13 NYLON INSERT FLANGE LOCKNUT ZC YELLOW
4	1	425-0006-00	Mower Inner Idler Spacer
5	1	418-0012-00	1/2-13 X 2-1/4 HEX C/S GR 5 ZINC
6	3	413-0010-00	1/2-13 HEX FLANGE NUT W/SERR ZINC
7	1	430-0001-00	Mower Pump Spring Tensioner
8	1	439-0132-00	RT/SRT Clutch Anti-rotation Brkt
9	1	434-0007-00	2019 Mower Deck Spring
10	4	418-0010-00	5/16-18 X 1 CARRIAGE BOLT ZC/YEL
11	6	413-0006-00	5/16-18 HEX FLANGE NUT W/SERR ZINC
12	1	418-0013-00	7/16-14 X 2-1/2 HEX C/S GR 5 ZINC
13	1	418-0009-00	1/2-13 X 5-1/2 HEX FLANGE BOLT GR 8 ZY
6	1	433-0014-00	6-3/4” Idler Pulley, 15/16” Spacer Assembly

Gas Tank Assembly

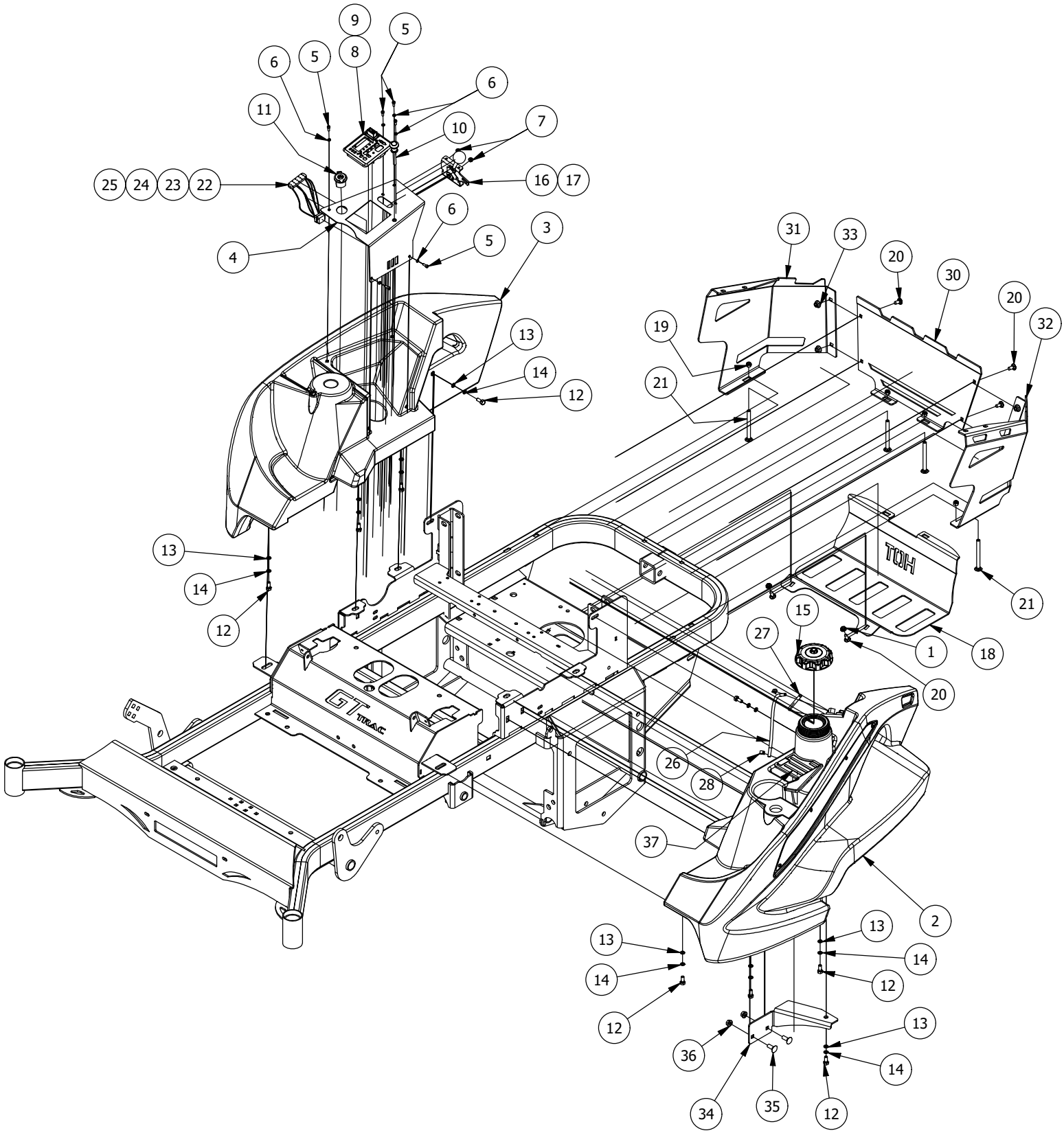

Gast Tank Assembly			
ITEM	QTY	PART NUMBER	DESCRIPTION
1	2	413-0006-00	5/16-18 HEX FLANGE NUT W/SERR ZINC
2	1	467-0001-00	Mower Gasoline Fuel Tank Assembly
3	1	467-0002-00	Mower Console
4	1	439-0022-00	Mower Control Panel Bracket
5	6	418-0055-00	10-24 X 1/2 SOCKET C/S 18-8 SS
6	6	419-0011-00	#10 SPLIT LOCKWASHER 18-8 SS
7	2	413-0008-00	10-24 NYLON INSERT LOCKNUT 18-8 SS
8	1	486-0004-00	Mower Control Console, Carbureted Engine
9	1	486-0003-00	Mower Control Console-EFI
10	1	464-0002-00	Choke Cable
11	1	677-2075-00	12 Volt Auxiliary Plug
12	9	418-0054-00	5/16-18 X 3/4 HEX C/S ZINC
13	9	419-0007-00	5/16 Flat Washer
14	9	419-0009-00	5/16 SPLIT LOCKWASHER ZINC
15	1	467-0008-00	Tank Fill Neck Non-Venting Cap
16	1	464-0001-00	Mower Throttle Cable Assembly w / Handle
17	1	464-0006-00	Kawasaki 730 EFI & 850 EFI Throttle
18	1	439-0006-00	Mower Muffler Guard
19	4	413-0013-00	3/8-16 NYLON INSERT FLANGE LOCKNUT ZINC
20	6	418-0008-00	5/16-18 X 3/4 CARRIAGE BOLT ZINC
21	4	418-0018-00	3/8-16 X 4 CARRIAGE BOLT ZINC/YEL
22	1	486-0010-00	Mower B&S Vanguard 32hp/36hp Harness
23	1	486-0024-00	Kawasaki EFI Wiring Harness
24	1	486-0019-00	Vanguard 37 HP Harness
25	1	486-0040-00	Harness for Vanguard 26hp & Kawasaki 852cc&FX1000
26	1	751-1014-00	1/4 Fuel Line - Low Perm
27	1	451-0002-00	vapor vent line tube
28	2	472-0004-00	1/2" (#8) Hose Clamp
29	1	490-0459-00	2021 SRT Frame Assembly
30	1	439-0690-00	2021 RT/SRT Engine Cowling Center
31	1	439-0691-00	2021 RT/SRT Engine Cowling Right
32	1	439-0692-00	2021 RT/SRT Engine Cowling Left
33	4	413-0066-00	5/16-24 Hex Flange Nut Serr Yello Zinc
34	1	439-0448-00	RT/SRT Gas Tank Support
35	2	418-0045-00	3/8-16 X 1 Carriage Bolt Zinc Yellow
36	2	413-0020-00	3/8-16 HEX FLANGE NUT W/SERR ZINC YELLOW
37	1	481-0004-00	Rubber Tank Storage Compartment Insert

Transmission Assembly

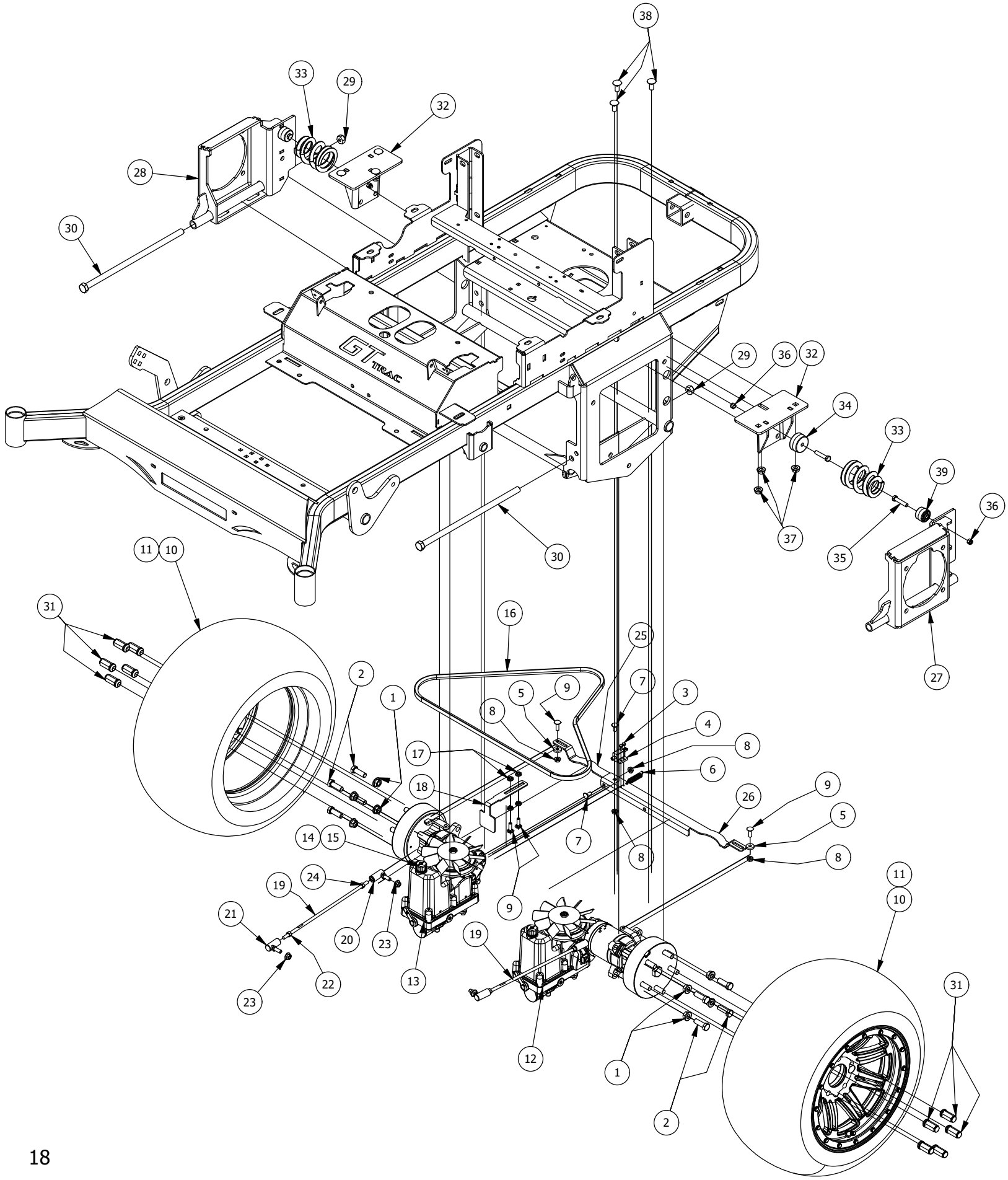

Transmission Assembly			
ITEM	QTY	PART NUMBER	DESCRIPTION
1	8	413-0010-00	1/2-13 HEX FLANGE NUT W/SERR ZINC
2	8	418-0020-00	1/2-13 X 1-1/2 HEX C/S GR 5 ZINC
3	2	418-0032-00	8-32 X 1/2 IND. HWH SLOT TYPE F TCS ZINC
4	1	486-0030-00	Safety Switch
5	2	419-0006-00	.312 ID X .875 OD X .1875 THK F/W NYLON BLK
6	1	434-0003-00	Brake Pedal Release Spring
7	2	418-0008-00	5/16-18 X 3/4 CARRIAGE BOLT ZINC
8	4	413-0019-00	5/16-18 NYLON INSERT FLANGE L/NUT ZINC
9	4	418-0010-00	5/16-18 X 1 CARRIAGE BOLT ZC/YEL
10	2	422-0010-00	Alum Wheel Upgrade for 54” Deck (416 Wheel w/ 24x10.50-R12)
11	2	422-0005-00	Mower Aluminum Wheel and Radial Tire (XD/Upgrades)
12	1	450-0005-00	HTJ12 Parker Hydrostatic Transmission Left
13	1	450-0006-00	HTJ12 Parker Hydrostatic Transmission Right
14	2	450-0031-00	Parker Transaxle Dip Stick
15	1	450-0023-00	HTEHTJ Filter
16	1	461-0005-00	Mower A Pump Belt, A x 69.25" Effective Length SRT
17	4	413-0006-00	5/16-18 HEX FLANGE NUT W/SERR ZINC
18	1	439-0066-00	Mower Standard Transmission Brake Interlock Bracket
19	2	435-0002-00	Transmission Drive Arm Rod Standard Transmission
20	2	410-0001-00	Control Arm Rod End, Right
21	2	410-0002-00	Control Arm Rod End, Left
22	2	413-0003-00	5/16 Hex Nut Left hand thread
23	4	413-0034-00	5/16-24 HEX FLANGE NUT W/SERR ZINC
24	2	413-0035-00	5/16-24 HEX NUT ZINC
25	1	439-0606-00	Mower Park Brake Bracket Right
26	1	439-0607-00	Mower Park Brake Bracket Left
27	1	490-0009-00	Mower Left Rear Suspension Assembly-SRT-Pro, HD
28	1	490-0010-00	Mower Right Rear Suspension Assembly-SRT-Pro, HD
29	2	413-0050-00	5/8-11 NYLON INSERT FLANGE L/NUT ZINC
30	2	418-0058-00	5/8-11 X 15" HEX C/S GR 2 ZINC 3" THD LENGTH
31	10	613-0001-00	1/2 Lug Nut-44011- Front
32	2	490-0069-02	Mower Suspension Frame Bracket Assembly
33	2	587-0002-00	eNVy Rear Suspension Spring
34	2	434-0010-00	Suspension Spring inside Guide
35	4	418-0051-00	3/8-16 X 1-3/4 HEX C/S GR 2 ZINC
36	4	413-0013-00	3/8-16 NYLON INSERT FLANGE LOCKNUT ZINC
37	6	413-0001-00	7/16-14 HEX FLANGE NUT W/SERR ZINC
38	6	418-0017-00	7/16-14 X 1 CARRIAGE BOLT ZINC
39	2	434-0011-00	Suspension Spring Outside Guide

54" Deck Assembly 1

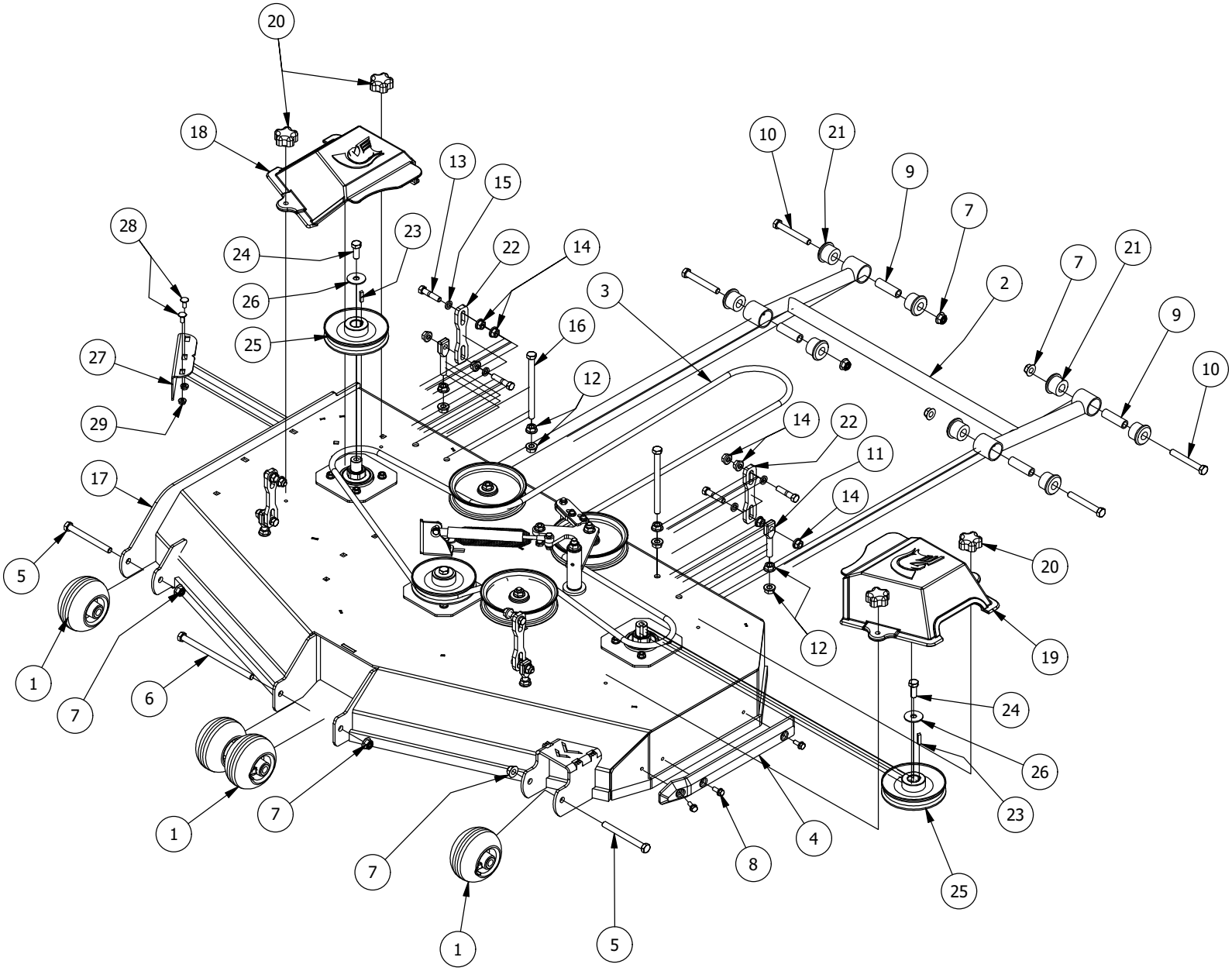

54" Deck Assembly 1			
ITEM	QTY	PART NUMBER	DESCRIPTION
1	4	422-0001-00	Anti-Scalp Wheel
2	1	490-0014-00	Mower 54"/61" Deck Frame Stabilizer Assembly
3	1	461-0001-00	54" Mower Deck Belt, HB x 153.5" Effective Length
4	1	429-0001-00	Mower Nylon Deck Guard
5	2	418-0016-00	1/2-13 X 5 HEX C/S GR 2 ZINC YELLOW
6	1	418-0003-00	1/2-13 X 8-1/2 HEX C/S GR 5 ZINC YELLOW
7	8	413-0002-00	1/2-13 NYLON INSERT FLANGE NUT ZINC YELLOW
8	3	418-0049-00	5/16-18 X 3/4 IND HWH TRI LOB ZINC
9	4	732-2001-00	Large MTV A-Arm Bushing Sleeve
10	4	418-0021-00	1/2-13 X 3-3/4 HEX C/S GR 5 ZINC
11	4	448-0001-00	Mower Deck Height Adjustment Stud
12	12	413-0005-00	1/2-13 HEX FLANGE NUT W/SERR ZINC YELLOW
13	8	418-0046-00	7/16-14 X 2 HEX C/S GR 5 ZINC YELLOW
14	17	413-0011-00	7/16-14 HEX FLANGE NUT W/SERR ZINC YELLOW
15	8	419-0010-00	.443 ID X .750 OD X .125 THK NYLON BLACK
16	2	418-0044-00	1/2-13 X 6-1/2 HEX C/S GR 8 ZINC YELLOW
17	1	490-0063-00	2020 54" RT/SRT Deck Assembly
18	1	414-0019-00	48" & 54" Deck Right Pulley Cover
19	1	414-0018-00	48" & 54" Deck Left Pulley Cover
20	4	445-0005-00	5/16-18 5-LOBE (STAR) FEMALE SOFT TOUCH KNOB (1.90 DIA) BLK
21	8	732-2000-00	Large MTV A-Arm Bushing
22	4	435-0007-00	Mower Deck Link
23	3	442-0001-00	1/4 X 1 SQUARE KEY STOCK
24	3	418-0006-00	1/2-20 X 1-1/4 HEX C/S GR 5 ZINC
25	3	433-0004-00	Deck Pulley 54"
26	3	419-0001-00	1/2" X 1-5/8 BELLEVILLE CUP WASHER ZINC YELLOW
27	1	439-0399-00	2020 RT&SRT/RZ 54 Deck wiper Brkt
28	2	418-0008-00	5/16-18 X 3/4 CARRIAGE BOLT ZINC
29	2	413-0022-00	5/16-18 HEX FLANGE NUT W/SERR ZINC YELLOW

54" Deck Assembly 2

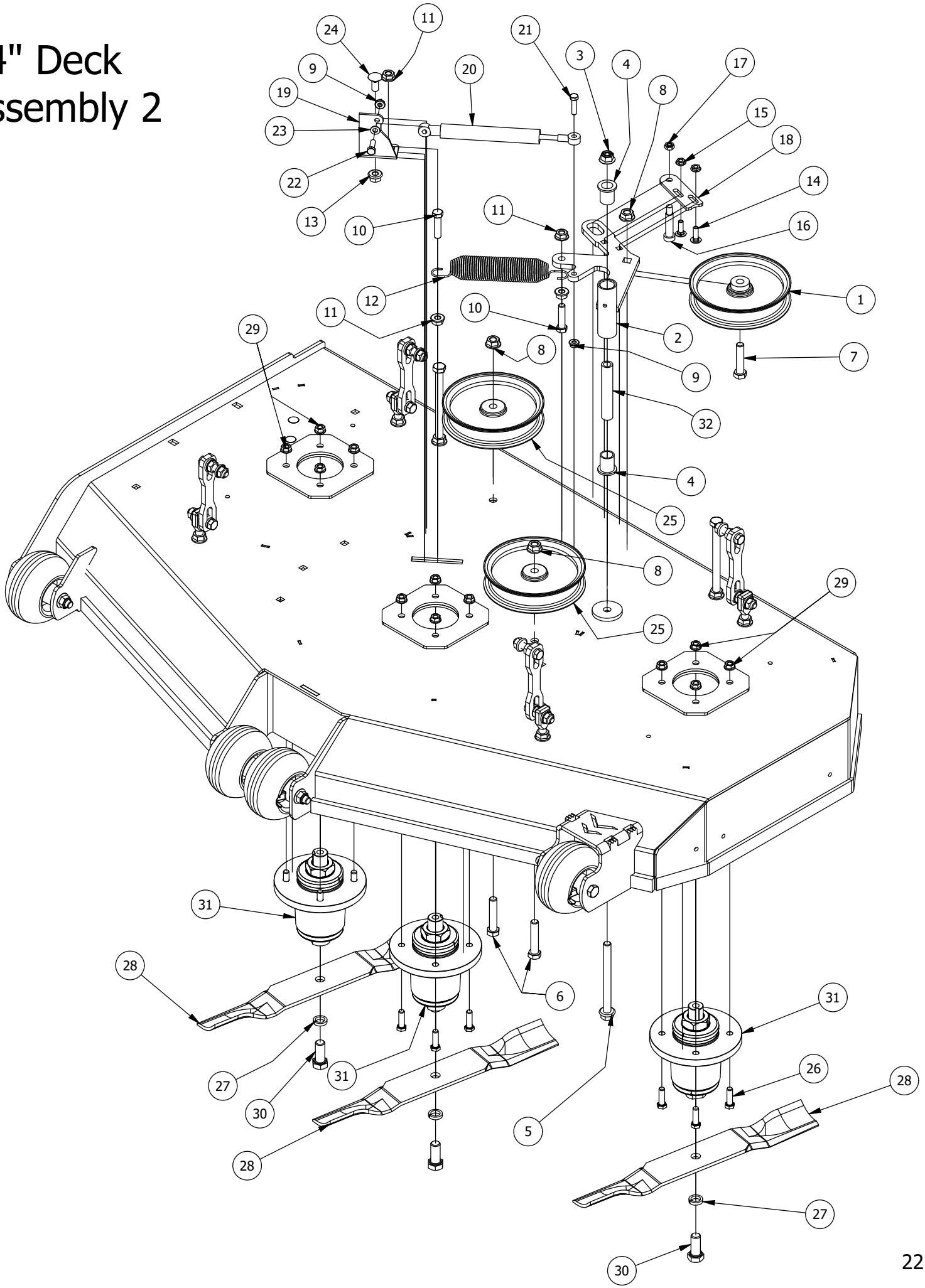

54" Deck Assembly 2			
ITEM	QTY	PART NUMBER	DESCRIPTION
1	1	433-0014-00	6-3/4” Idler Pulley, 7/16” Spacer Assembly
2	1	490-0019-00	Mower Deck Idler Pulley Arm Assembly
3	4	413-0002-00	1/2-13 NYLON INSERT FLANGE LOCKNUT ZC YELLOW
4	2	410-0007-00	3/4" ID X 15/16" OD X 1-1/8" LENGTH FLANGE BUSHING
5	1	418-0009-00	1/2-13 X 5-1/2 HEX FLANGE BOLT GR 8 ZY
6	2	418-0014-00	1/2-13 X 2-1/2 HEX FLANGE BOLT GR 8 ZC YELLOW
7	1	418-0012-00	1/2-13 X 2-1/4 HEX C/S GR 5 ZINC
8	3	413-0010-00	1/2-13 HEX FLANGE NUT W/SERR ZINC
9	2	413-0027-00	5/16-18 NYLON INSERT FLANGE LOCKNUT ZC YELLOW
10	2	418-0011-00	7/16-14X 1-3/4 HEX C/S GR5 ZINC Yellow
11	4	413-0001-00	7/16-14 HEX FLANGE NUT W/SERR ZINC
12	1	434-0007-00	2019 Mower Deck Spring
13	17	413-0011-00	7/16-14 HEX FLANGE NUT W/SERR ZINC YELLOW
14	2	418-0010-00	5/16-18 X 1 CARRIAGE BOLT ZC/YEL
15	2	413-0006-00	5/16-18 HEX FLANGE NUT W/SERR ZINC
16	1	418-0106-00	1/2"-20x1-3/4" Shoulder Bolt
17	1	613-2004-00	3/8"-16 Nyloc Jam Nut
18	1	439-0257-00	Deck Idler Pulley Belt Retainer Brkt
19	1	439-0335-00	Deck Belt Idler Damper Mounting Bracket
20	1	434-0009-00	Idler Gas Spring
21	1	418-0109-00	5/16- 18 x 1 1/4 Hex C/S (GR.8) ZC/Yel
22	1	418-0108-00	5/16 x1 Hex C/S (GR8) ZC/Yel
23	1	419-0016-00	5/16" ID X 5/8" OD X 1/16" THK BRONZE WASHER
24	1	418-0017-00	7/16-14 X 1 CARRIAGE BOLT ZINC
25	2	433-0015-00	6-3/4” Idler Pulley, 15/16” Spacer Assembly
26	12	418-0005-00	3/8-16 x 1-1/4 Hex Bolt GR5
27	3	419-0004-00	5/8 SPLIT LOCKWASHER ZINC
28	3	438-0001-00	54" Mower Deck Blade
29	12	413-0004-00	3/8-16 HEX FLANGE NUT W/SERR ZINC
30	3	418-0078-00	5/8-11 X 1-1/2 HEX C/S GR 8 ZC YELLOW
31	3	437-0005-00	Mower Heavy Duty Deck Spindle
32	1	425-0006-00	Mower Inner Idler Spacer

61" Deck Assembly 1

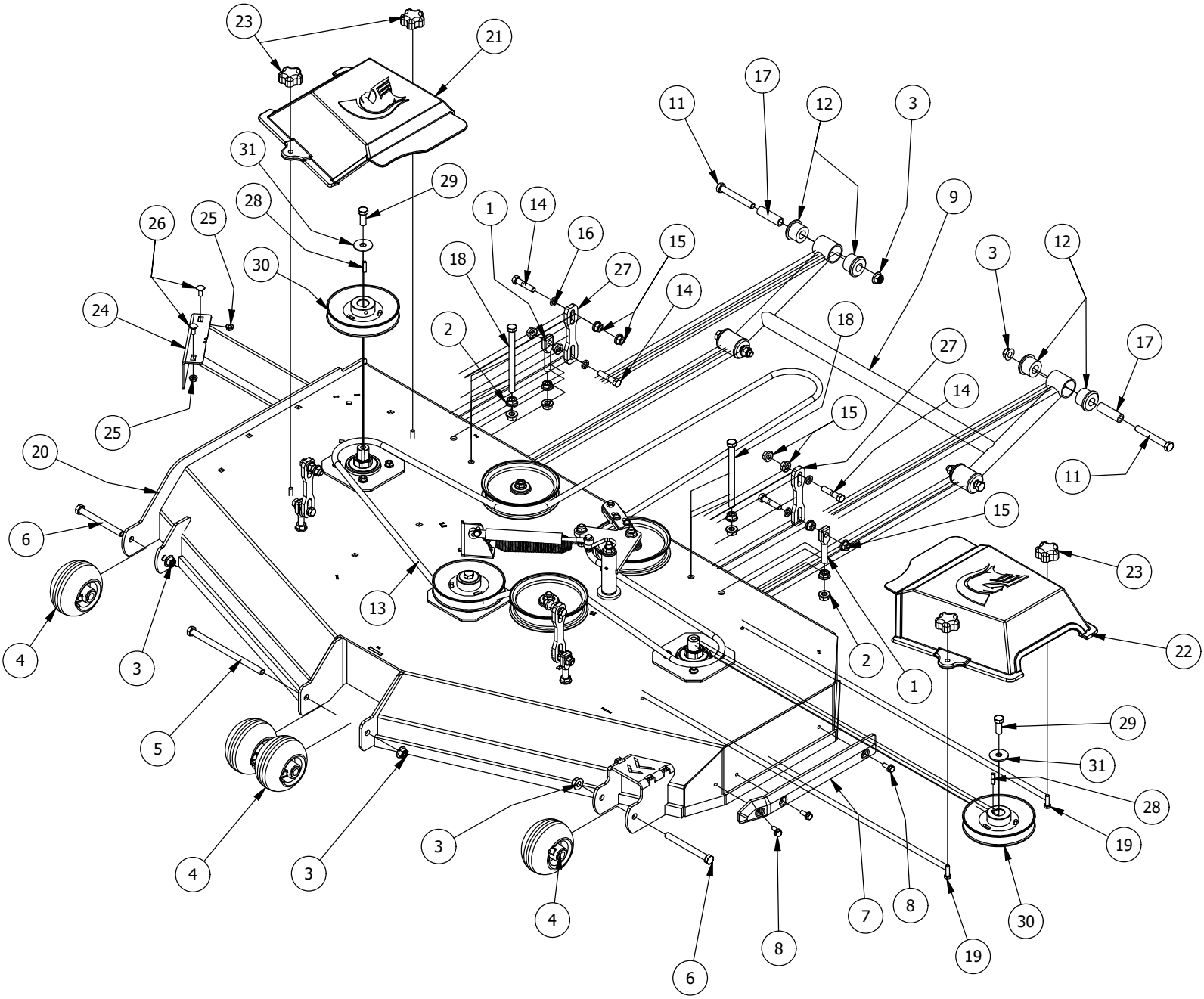

61" Deck Assembly 1			
ITEM	QTY	PART NUMBER	DESCRIPTION
1	4	448-0001-00	Mower Deck Height Adjustment Stud
2	12	413-0005-00	1/2-13 HEX FLANGE NUT W/SERR ZINC YELLOW
3	8	413-0002-00	1/2-13 NYLON INSERT FLANGE NUT ZINC YELLOW
4	4	422-0001-00	Anti-Scalp Wheel
5	1	418-0003-00	1/2-13 X 8-1/2 HEX C/S GR 5 ZINC YELLOW
6	2	418-0016-00	1/2-13 X 5 HEX C/S GR 2 ZINC YELLOW
7	1	429-0001-00	Mower Nylon Deck Guard
8	3	418-0049-00	5/16-18 X 3/4 IND HWH TRI LOB ZINC
9	1	490-0014-00	Mower 54"/61" Deck Frame Stabilizer Assembly
11	4	418-0021-00	1/2-13 X 3-3/4 HEX C/S GR 5 ZINC
12	8	732-2000-00	Large MTV A-Arm Bushing
13	1	461-0002-00	61" Mower Deck Belt, HB x 167.9" Effective Length
14	8	418-0046-00	7/16-14 X 2 HEX C/S GR 5 ZINC YELLOW
15	17	413-0011-00	7/16-14 HEX FLANGE NUT W/SERR ZINC YELLOW
16	8	419-0010-00	.443 ID X .750 OD X .125 THK NYLON BLACK
17	4	732-2001-00	Large MTV A-Arm Bushing Sleeve
18	2	418-0044-00	1/2-13 X 6-1/2 HEX C/S GR 8 ZINC YELLOW
19	5	418-0108-00	5/16 x1 Hex C/S (GR8) ZC/Yel
20	1	490-0061-00	2020 61 RT/SRT Deck assembly
21	1	414-0020-00	Right Pulley Cover 61" RZ/RT/SRT, 72" RT/SRT
22	1	414-0021-00	Left Pulley Cover 61" RZ/RT/SRT, 72" RT/SRT
23	4	445-0005-00	5/16-18 5-LOBE (STAR) FEMALE SOFT TOUCH KNOB (1.90 DIA) BLK
24	1	439-0398-00	2020 RT&SRT/RZ 61 Deck wiper Brkt
25	2	413-0022-00	5/16-18 HEX FLANGE NUT W/SERR ZINC YELLOW
26	2	418-0008-00	5/16-18 X 3/4 CARRIAGE BOLT ZINC
27	4	435-0007-00	Mower Deck Link
28	3	442-0001-00	1/4 X 1 SQUARE KEY STOCK
29	3	418-0006-00	1/2-20 X 1-1/4 HEX C/S GR 5 ZINC
30	3	433-0003-00	Deck Pulley 61"
31	3	419-0001-00	1/2" X 1-5/8 BELLEVILLE CUP WASHER ZINC YELLOW

61" Deck Assembly 2

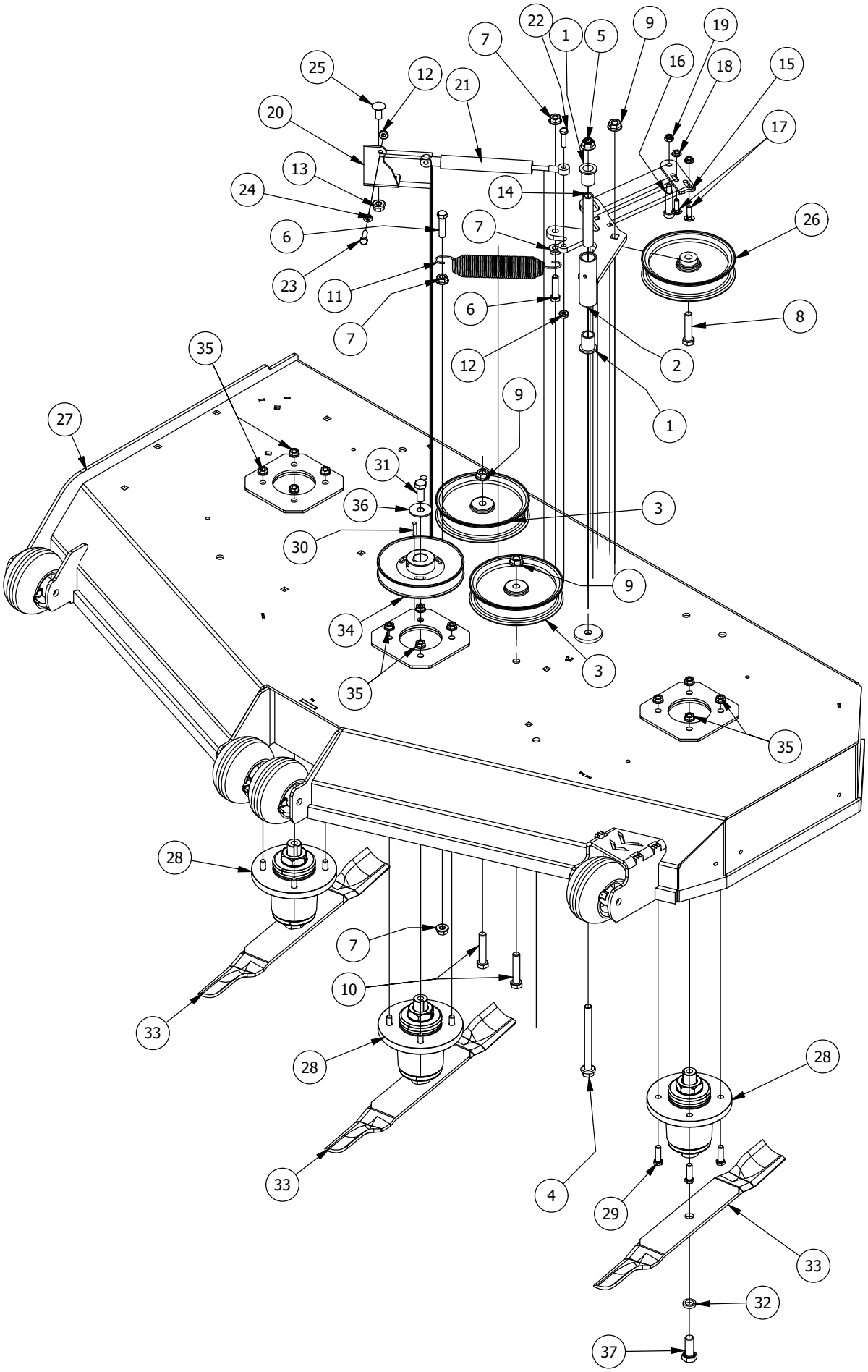

61" Deck Assembly 2			
ITEM	QTY	PART NUMBER	DESCRIPTION
1	2	410-0007-00	3/4" ID X 15/16" OD X 1-1/8" LENGTH FLANGE BUSHING
2	1	490-0019-00	Mower Deck Idler Pulley Arm Assembly
3	2	433-0015-00	6-3/4” Idler Pulley, 15/16” Spacer Assembly
4	1	418-0009-00	1/2-13 X 5-1/2 HEX FLANGE BOLT GR 8 ZY
5	4	413-0002-00	1/2-13 NYLON INSERT FLANGE LOCKNUT ZC YELLOW
6	2	418-0011-00	7/16-14X 1-3/4 HEX C/S GR5 ZINC Yellow
7	4	413-0001-00	7/16-14 HEX FLANGE NUT W/SERR ZINC
8	1	418-0012-00	1/2-13 X 2-1/4 HEX C/S GR 5 ZINC
9	3	413-0010-00	1/2-13 HEX FLANGE NUT W/SERR ZINC
10	2	418-0014-00	1/2-13 X 2-1/2 HEX FLANGE BOLT GR 8 ZC YELLOW
11	1	434-0007-00	2019 Mower Deck Spring
12	2	413-0027-00	5/16-18 NYLON INSERT FLANGE LOCKNUT ZC YELLOW
13	17	413-0011-00	7/16-14 HEX FLANGE NUT W/SERR ZINC YELLOW
14	1	425-0006-00	Mower Inner Idler Spacer
15	1	439-0257-00	Deck Idler Pulley Belt Retainer Brkt
16	1	418-0106-00	1/2"-20x1-3/4" Shoulder Bolt
17	2	418-0010-00	5/16-18 X 1 CARRIAGE BOLT ZC/YEL
18	2	413-0006-00	5/16-18 HEX FLANGE NUT W/SERR ZINC
19	1	613-2004-00	3/8"-16 Nyloc Jam Nut
20	1	439-0335-00	Deck Belt Idler Damper Mounting Bracket
21	1	434-0009-00	Idler Gas Spring
22	1	418-0109-00	5/16- 18 x 1 1/4 Hex C/S (GR.8) ZC/Yel
23	1	418-0108-00	5/16 x1 Hex C/S (GR8) ZC/Yel
24	1	419-0016-00	5/16" ID X 5/8" OD X 1/16" THK BRONZE WASHER
25	1	418-0017-00	7/16-14 X 1 CARRIAGE BOLT ZINC
26	1	433-0014-00	6-3/4” Idler Pulley, 7/16” Spacer Assembly
27	1	490-0061-00	2020 61 RT/SRT Deck assembly
28	3	437-0005-00	Mower Heavy Duty Deck Spindle
29	12	418-0005-00	3/8-16 x 1-1/4 Hex Bolt GR5
30	3	442-0001-00	1/4 X 1 SQUARE KEY STOCK
31	3	418-0006-00	1/2-20 X 1-1/4 HEX C/S GR 5 ZINC
32	3	419-0004-00	5/8 SPLIT LOCKWASHER ZINC
33	3	438-0002-00	61" Mower Deck Blade
34	3	433-0003-00	Deck Pulley 61"
35	12	413-0004-00	3/8-16 HEX FLANGE NUT W/SERR ZINC
36	3	419-0001-00	1/2" X 1-5/8 BELLEVILLE CUP WASHER ZINC YELLOW
37	3	418-0078-00	5/8-11 X 1-1/2 HEX C/S GR 8 ZC YELLOW

72" Deck Assembly 1

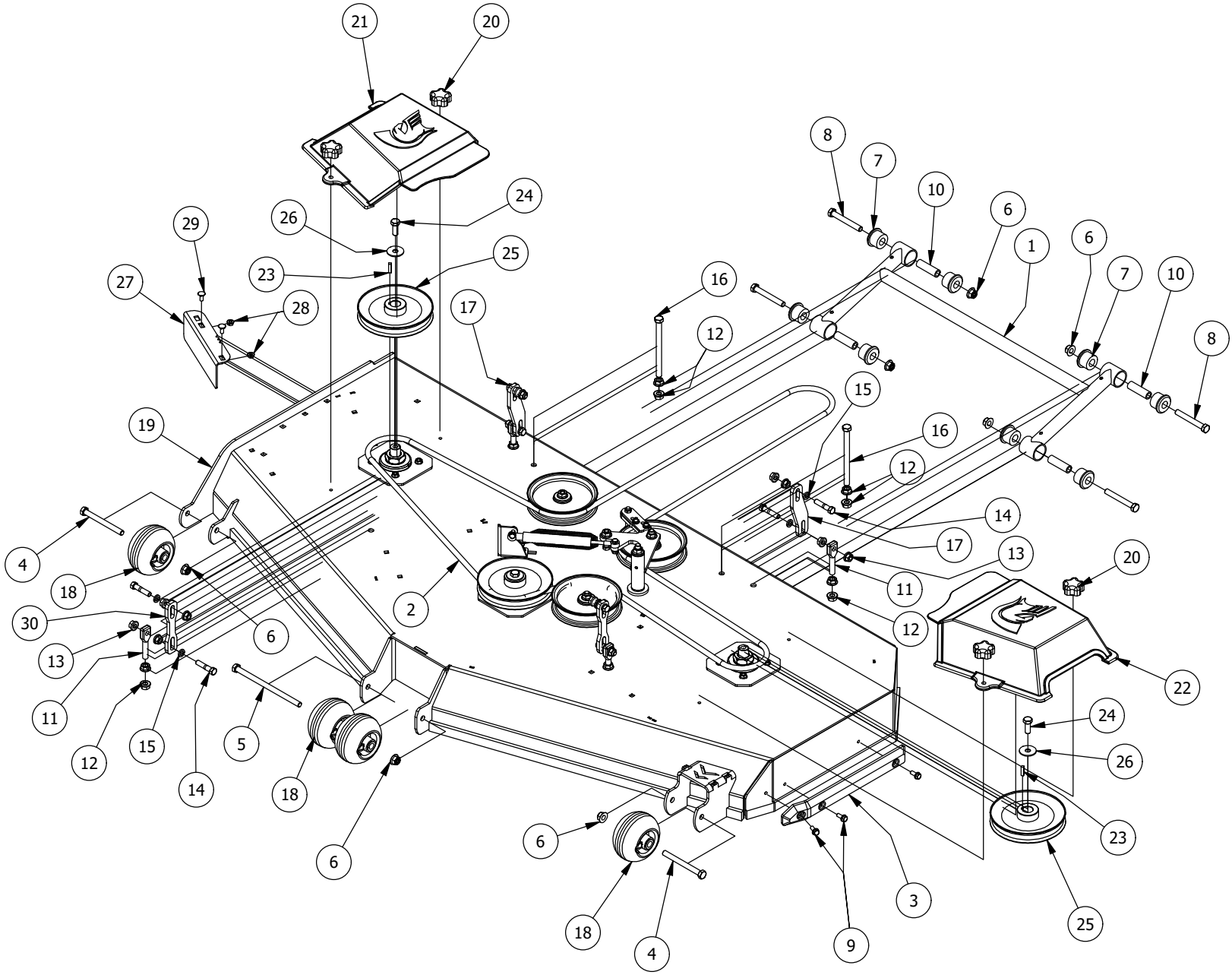

72" Deck Assembly 1			
ITEM	QTY	PART NUMBER	DESCRIPTION
1	1	490-0015-00	Mower 72" Deck Frame Stabilizer Assembly
2	1	461-0003-00	72" Mower Deck Belt, HB x 186.5" Effective Length
3	1	429-0001-00	Mower Nylon Deck Guard
4	2	418-0016-00	1/2-13 X 5 HEX C/S GR 2 ZINC YELLOW
5	1	418-0015-00	1/2-13 X 8-1/2 HEX C/S GR 2 ZINC YELLOW
6	8	413-0002-00	1/2-13 NYLON INSERT FLANGE NUT ZINC YELLOW
7	8	732-2000-00	Large MTV A-Arm Bushing
8	4	418-0021-00	1/2-13 X 3-3/4 HEX C/S GR 5 ZINC
9	3	418-0049-00	5/16-18 X 3/4 IND HWH TRI LOB ZINC
10	4	732-2001-00	Large MTV A-Arm Bushing Sleeve
11	4	448-0001-00	Mower Deck Height Adjustment Stud
12	12	413-0005-00	1/2-13 HEX FLANGE NUT W/SERR ZINC YELLOW
13	17	413-0011-00	7/16-14 HEX FLANGE NUT W/SERR ZINC YELLOW
14	8	418-0046-00	7/16-14 X 2 HEX C/S GR 5 ZINC YELLOW
15	8	419-0010-00	.443 ID X .750 OD X .125 THK NYLON BLACK
16	2	418-0044-00	1/2-13 X 6-1/2 HEX C/S GR 8 ZINC YELLOW
17	2	435-0011-00	Mower 72" Deck Rear Height Arm Connecting Link
18	4	422-0001-00	Anti-Scalp Wheel
19	1	490-0066-00	72" Mower Deck Assembly
20	4	445-0005-00	5/16-18 5-LOBE (STAR) FEMALE SOFT TOUCH KNOB (1.90 DIA) BLK
21	1	414-0020-00	Right Pulley Cover 61" RZ/RT/SRT, 72" RT/SRT
22	1	414-0021-00	Left Pulley Cover 61" RZ/RT/SRT, 72" RT/SRT
23	3	442-0001-00	1/4 X 1 SQUARE KEY STOCK
24	3	418-0006-00	1/2-20 X 1-1/4 HEX C/S GR 5 ZINC
25	3	433-0005-00	Deck Pulley 72"
26	3	419-0001-00	1/2" X 1-5/8 BELLEVILLE CUP WASHER ZINC YELLOW
27	1	439-0396-00	2020 RT&SRT 72 Deck Wiper Brkt
28	2	413-0022-00	5/16-18 HEX FLANGE NUT W/SERR ZINC YELLOW
29	2	418-0008-00	5/16-18 X 3/4 CARRIAGE BOLT ZINC
30	2	435-0007-00	Mower Deck Link

72" Deck Assembly 2

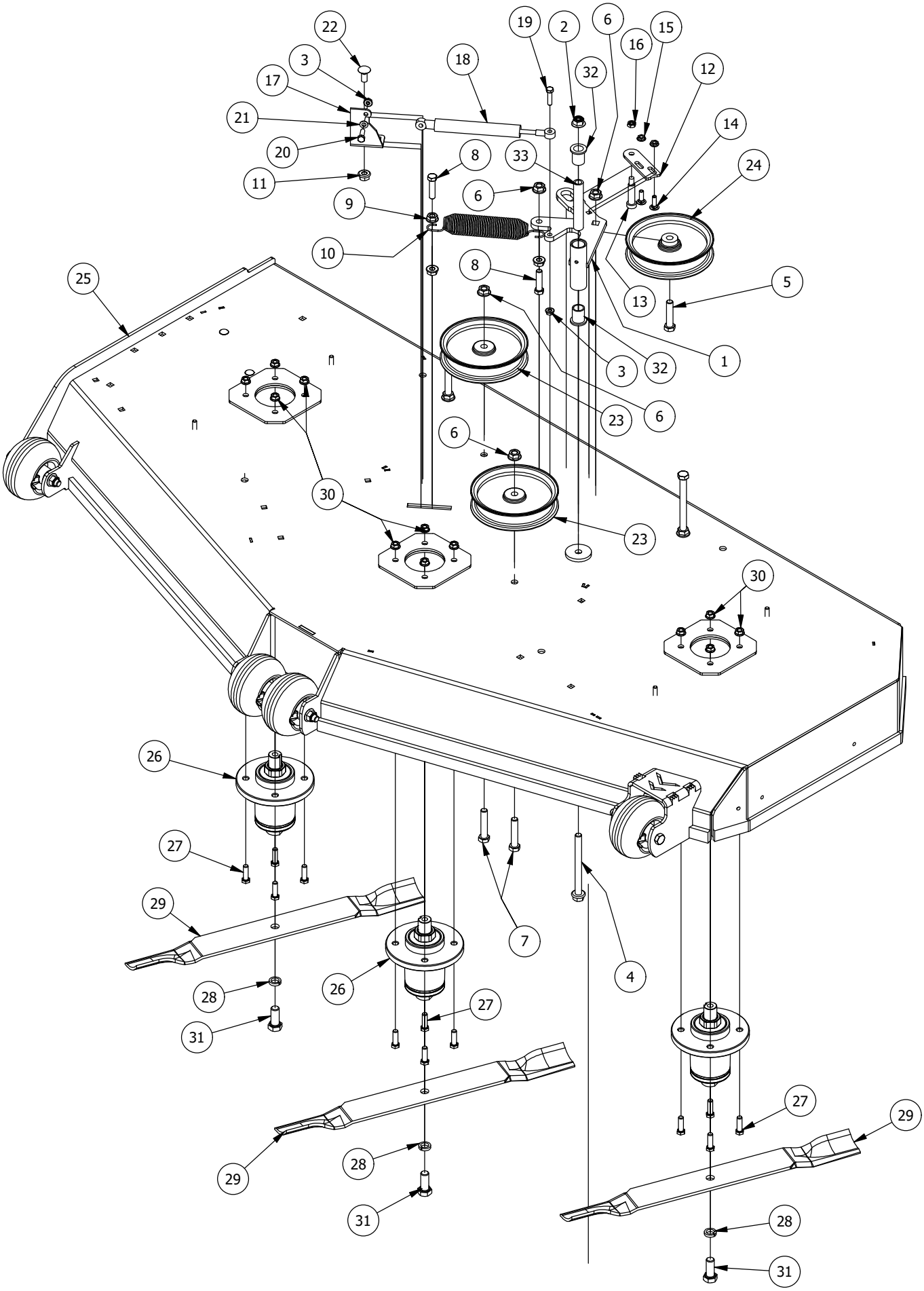

72" Deck Assembly 2			
ITEM	QTY	PART NUMBER	DESCRIPTION
1	1	490-0019-00	Mower Deck Idler Pulley Arm Assembly
2	4	413-0002-00	1/2-13 NYLON INSERT FLANGE LOCKNUT ZC YELLOW
3	2	413-0027-00	5/16-18 NYLON INSERT FLANGE LOCKNUT ZC YELLOW
4	1	418-0009-00	1/2-13 X 5-1/2 HEX FLANGE BOLT GR 8 ZY
5	1	418-0012-00	1/2-13 X 2-1/4 HEX C/S GR 5 ZINC
6	4	413-0010-00	1/2-13 HEX FLANGE NUT W/SERR ZINC
7	2	418-0014-00	1/2-13 X 2-1/2 HEX FLANGE BOLT GR 8 ZC YELLOW
8	2	418-0011-00	7/16-14 X 1-3/4 HEX C/S GR 2 ZINC (NOT A/T)
9	3	413-0001-00	7/16-14 HEX FLANGE NUT W/SERR ZINC
10	1	434-0007-00	2019 Mower Deck Spring
11	17	413-0011-00	7/16-14 HEX FLANGE NUT W/SERR ZINC YELLOW
12	1	439-0257-00	Deck Idler Pulley Belt Retainer Brkt
13	1	418-0106-00	1/2"-20x1-3/4" Shoulder Bolt
14	2	418-0010-00	5/16-18 X 1 CARRIAGE BOLT ZC/YEL
15	2	413-0006-00	5/16-18 HEX FLANGE NUT W/SERR ZINC
16	1	613-2004-00	3/8"-16 Nyloc Jam Nut
17	1	439-0335-00	Deck Belt Idler Damper Mounting Bracket
18	1	434-0009-00	Idler Gas Spring
19	1	418-0109-00	5/16- 18 x 1 1/4 Hex C/S (GR.8) ZC/Yel
20	1	418-0108-00	5/16 x1 Hex C/S (GR8) ZC/Yel
21	1	419-0016-00	5/16" ID X 5/8" OD X 1/16" THK BRONZE WASHER
22	1	418-0017-00	7/16-14 X 1 CARRIAGE BOLT ZINC
23	2	433-0015-00	6-3/4” Idler Pulley, 15/16” Spacer Assembly
24	1	433-0014-00	6-3/4” Idler Pulley, 7/16” Spacer Assembly
25	1	490-0066-00	72" Mower Deck Assembly
26	3	437-0005-00	Mower Heavy Duty Deck Spindle
27	12	418-0005-00	3/8-16 x 1-1/4 Hex Bolt GR5
28	3	419-0004-00	5/8 SPLIT LOCKWASHER ZINC
29	3	438-0003-00	72" Mower Deck Blade
30	12	413-0004-00	3/8-16 HEX FLANGE NUT W/SERR ZINC
31	3	418-0078-00	5/8-11 X 1-1/2 HEX C/S GR 8 ZC YELLOW
32	2	410-0007-00	3/4" ID X 15/16" OD X 1-1/8" LENGTH FLANGE BUSHING
33	1	425-0006-00	Mower Inner Idler Spacer

Deck Chute Asembly

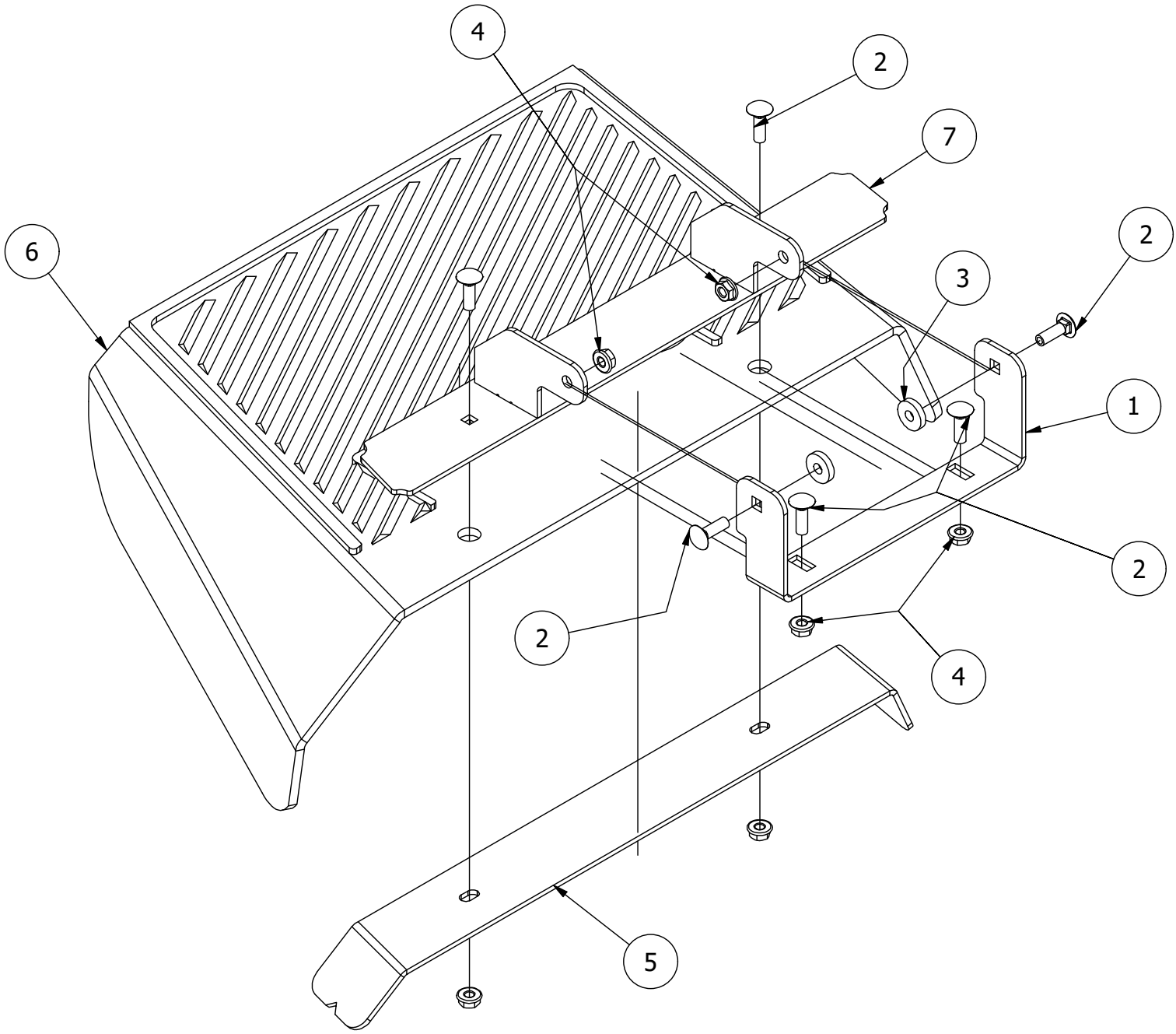

PARTS LIST			
ITEM	QTY	PART NUMBER	DESCRIPTION
1	1	439-0111-00	Mower Chute Mounting Bracket
2	6	418-0060-00	5/16-18 X 1 CARRIAGE BOLT ZINC YELLOW
3	2	419-0006-00	.312 ID X .875 OD X .1875 THK F/W NYLON BLK
4	6	413-0027-00	5/16-18 NYLON INSERT FLANGE LOCKNUT ZC YELLOW
5	1	439-0190-00	2020 Deck Chute Hinge Backer Bracket
6	1	481-0011-00	2020 RT/SRT Rubber Discharge Chute
7	1	490-0056-02	RT/SRT Deck Chute Hinge Assembly

(2 Bearing) Deck Spindle Assembly Parts List			
ITEM	QTY	PART NUMBER	DESCRIPTION
1	1	437-0015-00	Mower Deck Spindle Casting for 437-0004-00
2	1	437-0010-00	Deck Spindle Shaft For 437-0004-00 and 437-0005-00
3	1	437-0011-00	Deck Spindle Spacer for 437-0004-00
4	1	437-0014-00	Mower Deck Spindle Dust Cup
5	1	437-0013-00	Mower Deck Spindle Nut for 437-0004-00 and 437-0005-00
6	2	410-0003-00	Spindle Bearing

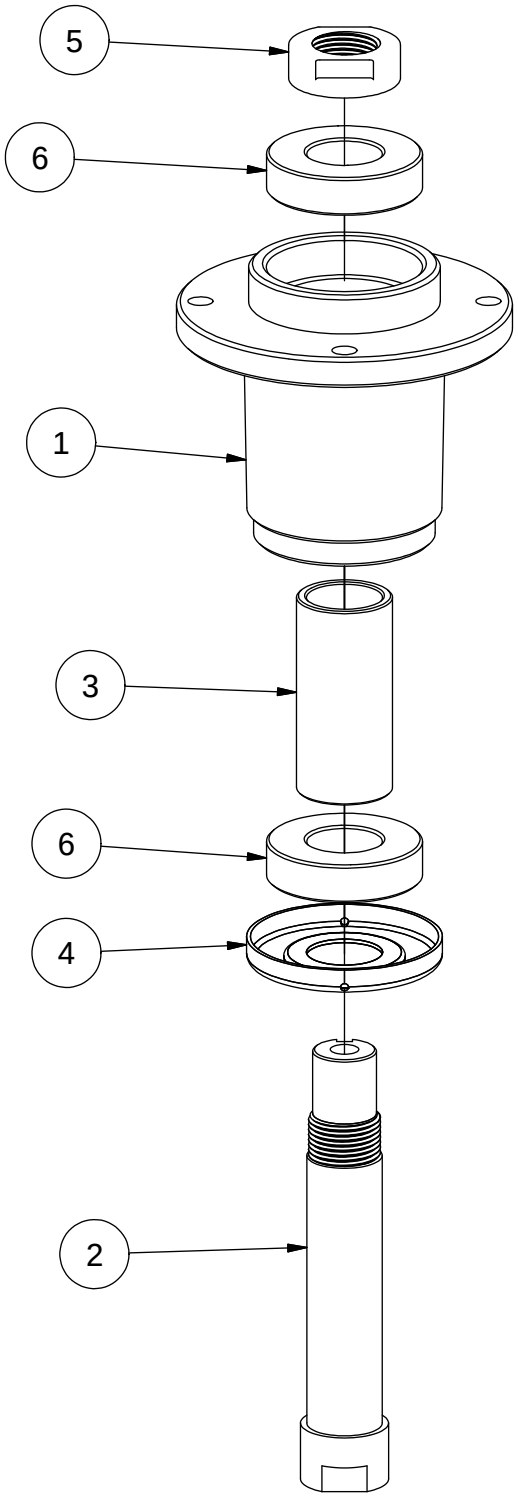

Kawasaki FXT 1000V
Carbureted Engine Assembly

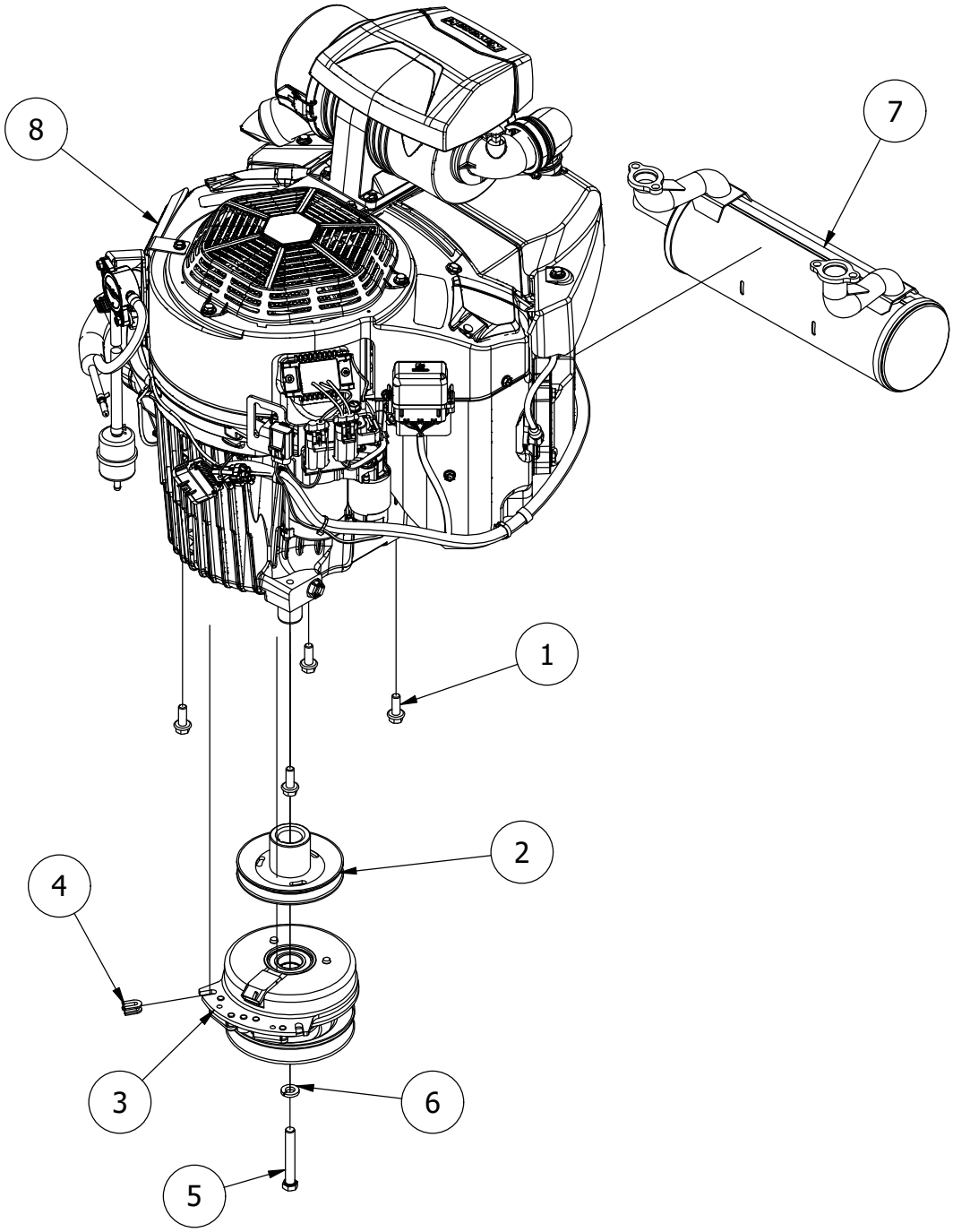

PARTS LIST			
ITEM	QTY	PART NUMBER	DESCRIPTION
1	4	418-0023-00	3/8-16 X 1-1/8 IND HWH W/SERR TRI LOB ZY
2	1	433-0001-00	Mower Hydraulic Pump Drive Pulley, A Belt
3	1	470-0002-00	PTO Clutch
4	1	437-0025-00	Mower Rotation Stop Brkt Sleeve
5	1	418-0022-00	7/16-20 X 3 HEX C/S GR 8 ZC YELLOW
6	1	419-0005-00	7/16 SPLIT LOCKWASHER GR 8 ZC YELLOW
7	1	415-0093-00	Exhaust for Kaw1000EFI
8	1	415-0084-00	Kawasaki FXT100V (1000 Carbureted) Engine

37 HP Vanguard Engine with Oil Guard Assembly

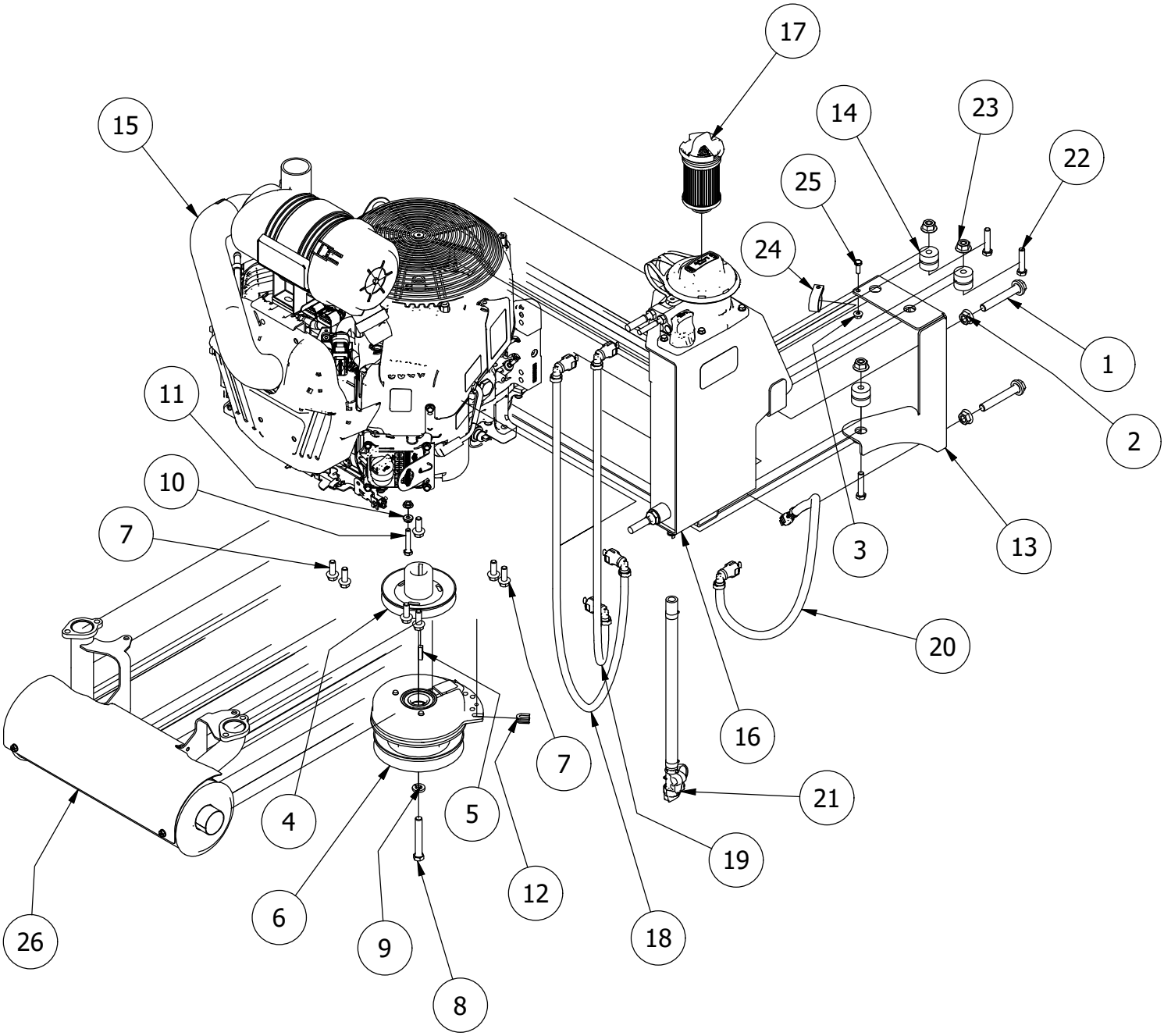

37 HP Vanguard Engine with Oil Guard Assembly			
ITEM	QTY	PART NUMBER	DESCRIPTION
1	2	418-0019-00	1/2-13 X 3-1/2 HEX FLANGE BOLT (GR.8) ZC/YEL
2	2	413-0014-00	1/2-13 HEX STOVER LOCKNUT GR C ZINC
3	1	413-0026-00	1/4-20 NYLON INSERT FLANGE L/NUT ZINC
4	1	433-0001-00	Mower Hydraulic Pump Drive Pulley, A Belt
5	1	442-0001-00	1/4 X 1 SQUARE KEY STOCK
6	1	470-0002-00	PTO Clutch
7	7	418-0023-00	3/8-16 X 1-1/8 IND HWH W/SERR TRI LOB ZY
8	1	418-0022-00	7/16-20 X 3 HEX C/S GR 8 ZC YELLOW
9	1	419-0005-00	7/16 SPLIT LOCKWASHER GR 8 ZC YELLOW
10	1	418-0024-00	5/16-18 X 1-3/4 HEX C/S GR 5 ZINC
11	2	413-0006-00	5/16-18 HEX FLANGE NUT W/SERR ZINC
12	1	437-0025-00	Mower Rotation Stop Brkt Sleeve
13	1	439-0199-00	Mower Oil Guard Tank Bracket
14	3	429-0005-00	Oil Guard Isolator
15	1	415-0016-00	Vanguard 37EFI with oil guard
16	1	415-0017-00	Vanguard 37 EFI Oil Guard Tank
17	1	415-0079-00	Oil Filter
18	1	415-0075-00	Oil Hose Assy, Supply
19	1	415-0076-00	Oil Hose Assy, Scavenge
20	1	415-0077-00	Oil Hose Assy, Vent
21	1	415-0078-00	Oil Flex Drain Hose
22	3	418-0051-00	3/8-16 X 1-3/4 HEX C/S GR 2 ZINC
23	3	413-0013-00	3/8-16 NYLON INSERT FLANGE L/NUT ZC
24	1	472-0002-00	1/2" CUSHIONED LOOP CLAMP
25	1	418-0035-00	1/4-20 X 3/4 HEX C/S GR 2 ZINC
26	1	415-0086-00	Exhaust System w/ Insulated Muffler for Vanguard 28/32/36/37

28HP Vanguard Engine Assembly

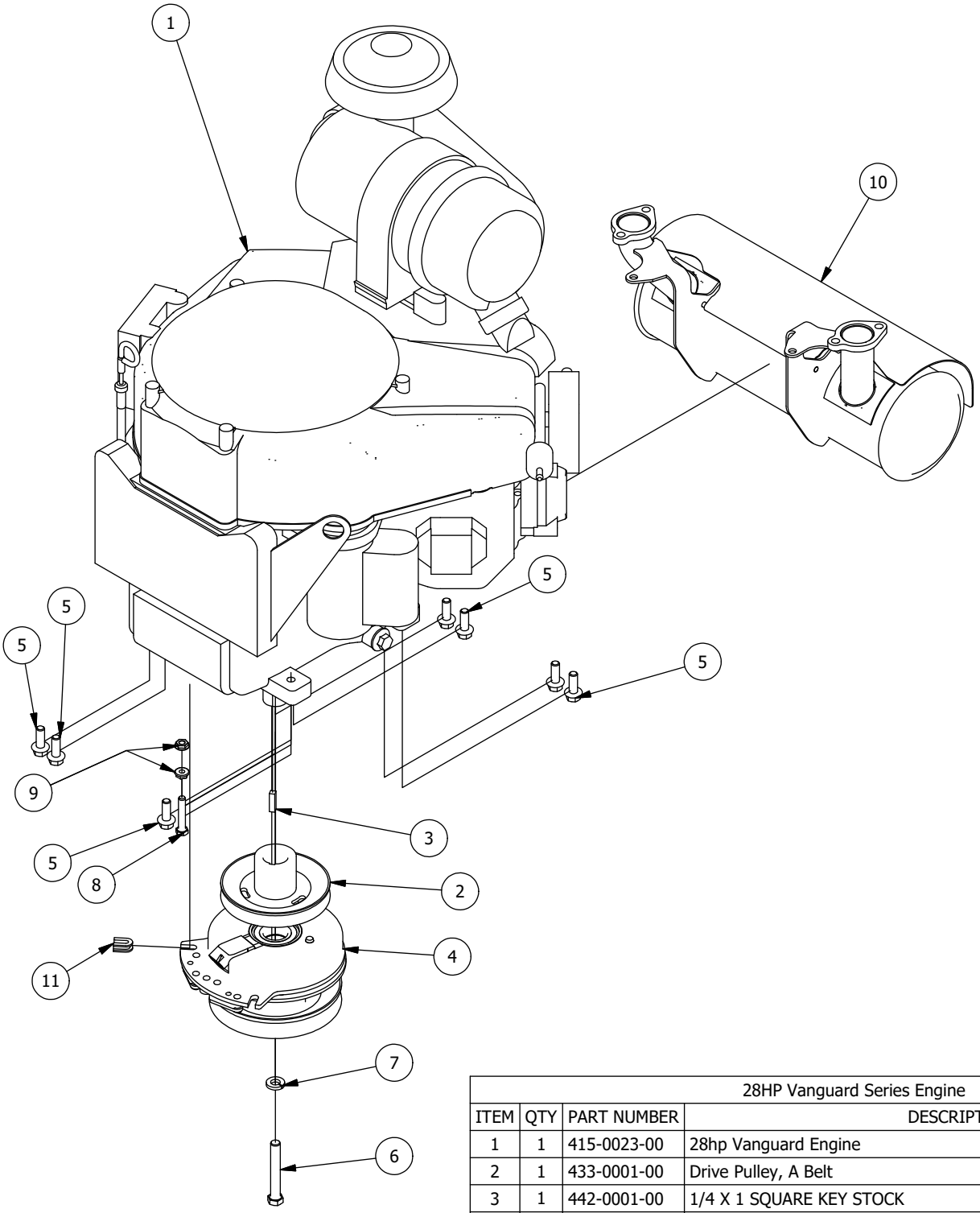

28HP Vanguard Series Engine			
ITEM	QTY	PART NUMBER	DESCRIPTION
1	1	415-0023-00	28hp Vanguard Engine
2	1	433-0001-00	Drive Pulley, A Belt
3	1	442-0001-00	1/4 X 1 SQUARE KEY STOCK
4	1	470-0002-00	PTO Clutch
5	7	418-0023-00	3/8-16 X 1-1/8 IND HWH W/SERR TRI LOB ZY
6	1	418-0022-00	7/16-20 X 3 HEX C/S GR 8 ZC YELLOW
7	1	419-0005-00	7/16 SPLIT LOCKWASHER GR 8 ZC YELLOW
8	1	418-0024-00	5/16-18 X 1-3/4 HEX C/S GR 5 ZINC
9	2	413-0006-00	5/16-18 HEX FLANGE NUT W/SERR ZINC
10	1	415-0051-00	B&S 32 HP/36HP Vanguard Series Engine Exhaust
11	1	437-0025-00	Mower Rotation Stop Brkt Sleeve

Kawasaki FXT 1000V
EFI Engine Assembly

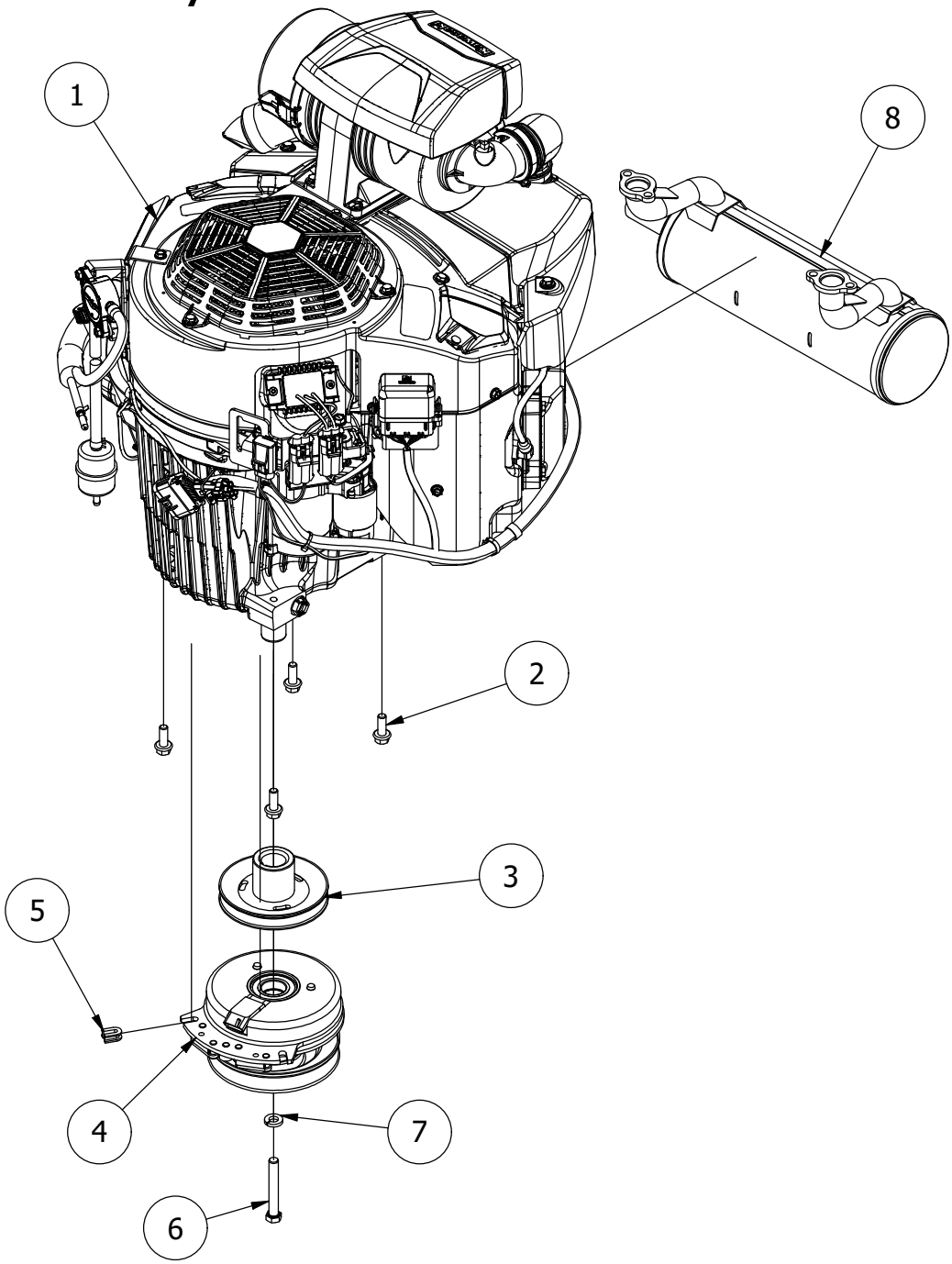

PARTS LIST			
ITEM	QTY	PART NUMBER	DESCRIPTION
1	1	415-0088-00	Kawasaki FXT1000V-EFI Engine
2	4	418-0023-00	3/8-16 X 1-1/8 IND HWH W/SERR TRI LOB ZY
3	1	433-0001-00	Mower Hydraulic Pump Drive Pulley, A Belt
4	1	470-0002-00	PTO Clutch
5	1	437-0025-00	Mower Rotation Stop Brkt Sleeve
6	1	418-0022-00	7/16-20 X 3 HEX C/S GR 8 ZC YELLOW
7	1	419-0005-00	7/16 SPLIT LOCKWASHER GR 8 ZC YELLOW
8	1	415-0093-00	Exhaust for Kaw1000EFI

491-0001-00
Warning Label Cluster

491-0003-00
Belt Routing Decal Cluster

491-0002-00
Step Decal

491-0040-00
Rear Spartan Logo

491-0038-00
Parker Pump Decal

491-0037-00
Front Spartan Logo

491-0039-00
Seat Weight Capacity Decal

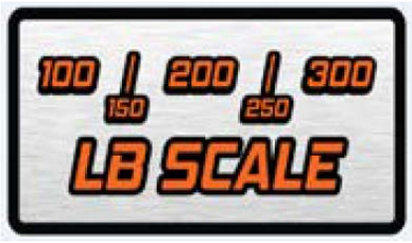

491-0175-00
SRT-XD Model Decal

491-0033-00
Drive Arm F/N/R Decal

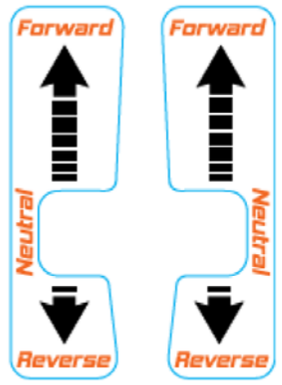

491-0094-00
Carbureted Console Decal

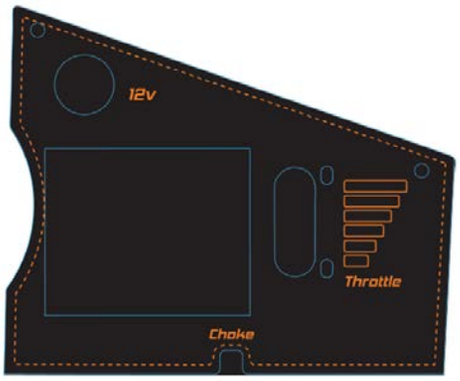

491-0132-00
72” Deck Decal

491-0080-00 & 491-0081-00
Fuel Tank Logo Left & Right Side

491-0130-00
54” Deck Decal

491-0190-00
2021 EPA Compliance Label

491-0093-00
EFI / Kohler Console Decal

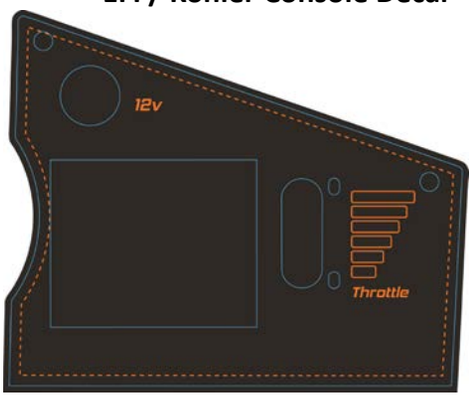

491-0131-00
61” Deck Decal