RZ Parts Manual

2021

Table of Contents

Front Fork Assembly 3

Brake, Floorboard, and Height Indicator Assembly 4-7

Seat & Battery Assembly 8-9

Drive Arm Assemblies 10-11

Gas Tank Assembly 12-13

Transmission Assembly 14-15

Clutch & Idler Pulley Assembly 16-17

48” Deck Assembly 18-21

54” Deck Assembly 22-25

61” Deck Assembly 26-29

Deck Chute Assembly 30

Spindle Assembly 31

Kawasaki FR691 Engine Assembly 32

Briggs and Stratton 25 HP Engine Assembly 33

Kawasaki FT730 Engine Assembly 34

Decals 35

PARTS LIST			
ITEM	QTY	PART NUMBER	DESCRIPTION
1	1	418-0002-00	1/2-20 X 1-1/4 HEX FLANGE BOLT GR 8 ZC YELLOW
2	1	426-0006-00	Mower Caster Shaft Washer
3	1	419-0025-00	Front Fork Caster Top Washer
4	1	490-0046-00	RZ Caster Fork Assembly
5	1	419-0003-00	1/2 FENDER WASHER 1-1/4" OD ZINC
6	1	425-0011-00	Caster Fork Shaft Bearing Spacer
7	2	410-0006-00	1" INSERT BEARING
8	1	418-0003-00	1/2-13 X 8-1/2 HEX C/S GR 5 ZINC YELLOW
9	1	413-0002-00	1/2-13 NYLON INSERT FLANGE NUT ZINC YELLOW
10	1	422-0027-00	RZ/RT Pro Front Tire Assembly-Smooth Tread
11	2	410-0014-00	Mower Caster Wheel Bearing
12	1	425-0010-00	Mower Caster Fork Wheel Spacer
13	1	437-0028-00	2021 Mower Caster Shaft
14	2	413-0063-00	1”-8 FIN HEX JAM NUT ZC
15	1	419-0024-00	1” L/W MED SPLIT ZC

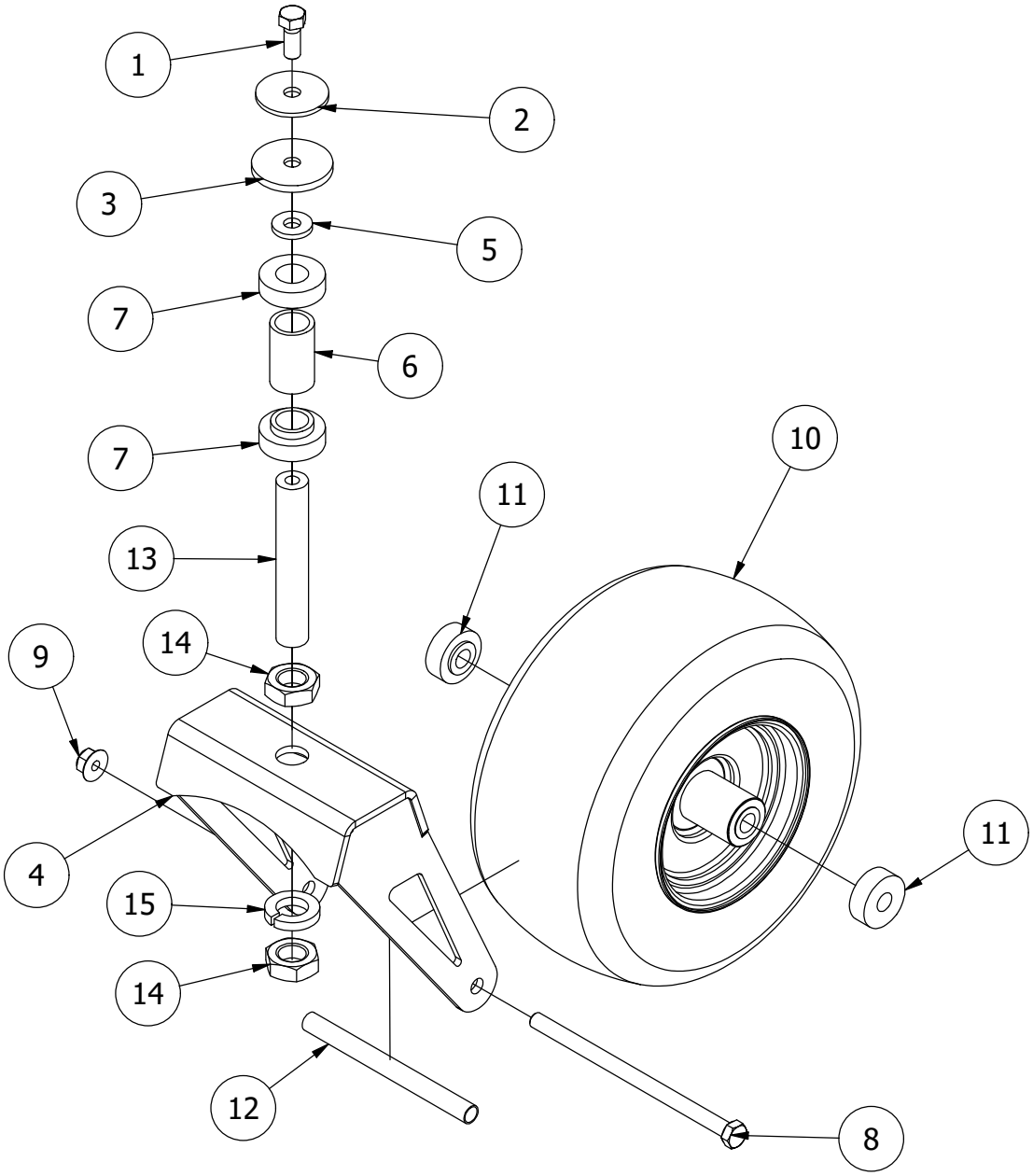

Brake, Floorboard, and Height Indicator Assembly

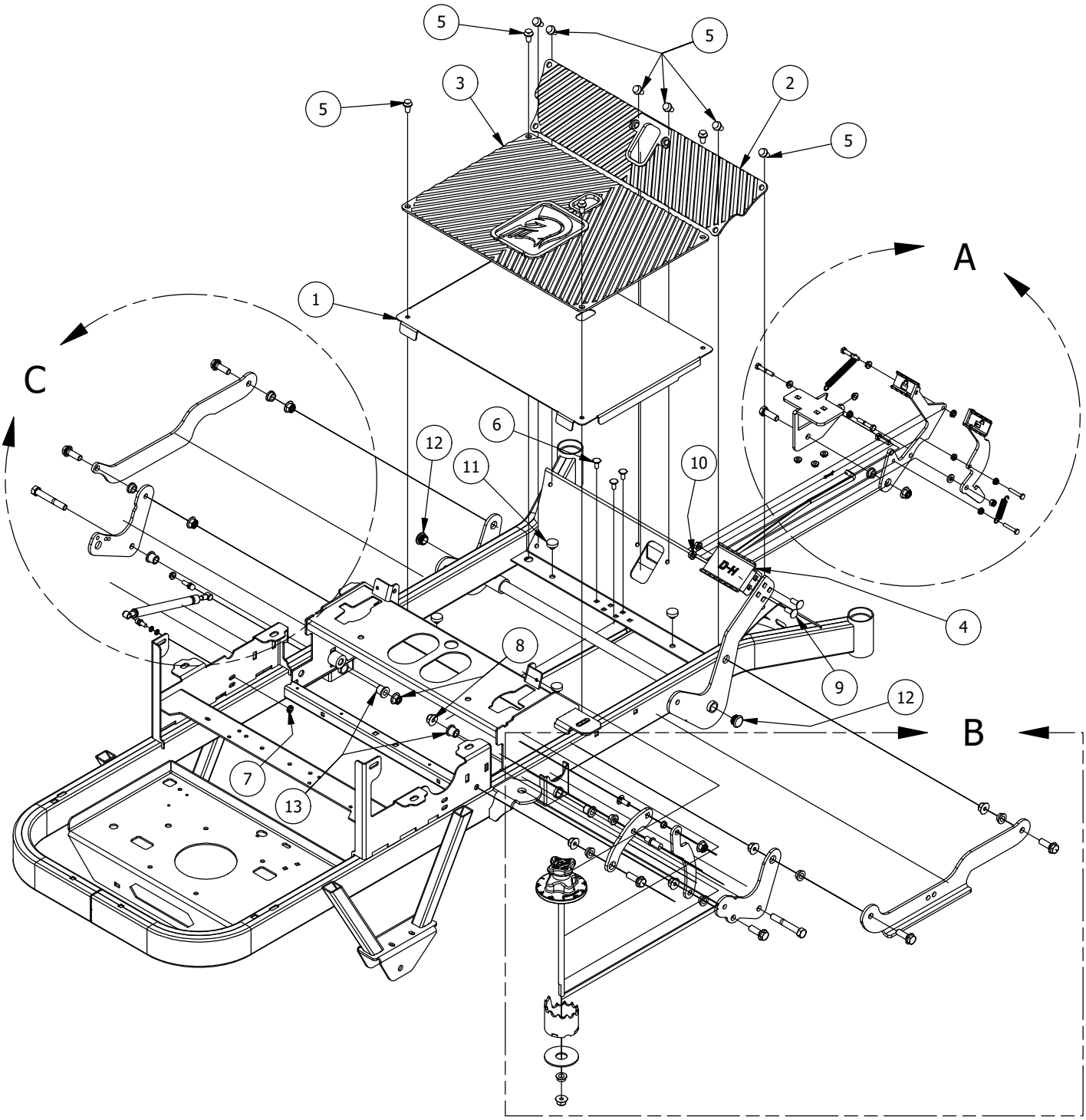

Parts List			
ITEM	QTY	PART NUMBER	DESCRIPTION
1	1	439-0114-00	Mower Floorboard
2	1	481-0005-00	2017 Mower Rubber Foot Rest Mat
3	1	481-0006-00	2017 Mower Logo Floor Mat
4	1	439-0059-00	Mower Deck Height Foot Pedal
5	10	414-0002-00	8MM PUSH TYPE RETAINER NYLON BLACK
6	3	418-0008-00	5/16-18 X 3/4 CARRIAGE BOLT ZINC
7	11	413-0006-00	5/16-18 HEX FLANGE NUT W/SERR ZINC
8	10	413-0002-00	1/2-13 NYLON INSERT FLANGE LOCKNUT ZC YELLOW
9	2	418-0045-00	3/8-16 X 1 Carriage Bolt Zinc Yellow
10	2	413-0020-00	3/8-16 HEX FLANGE NUT W/SERR ZINC YELLOW
11	4	429-0002-00	Push-In Rubber Bumper, Mower Floor
12	2	414-0016-00	1” Round Tube Plug
13	4	410-0068-00	.502 ID X .753 OD X .75 OAL X1 FL OD X .125 FL BUSHING

DETAIL A

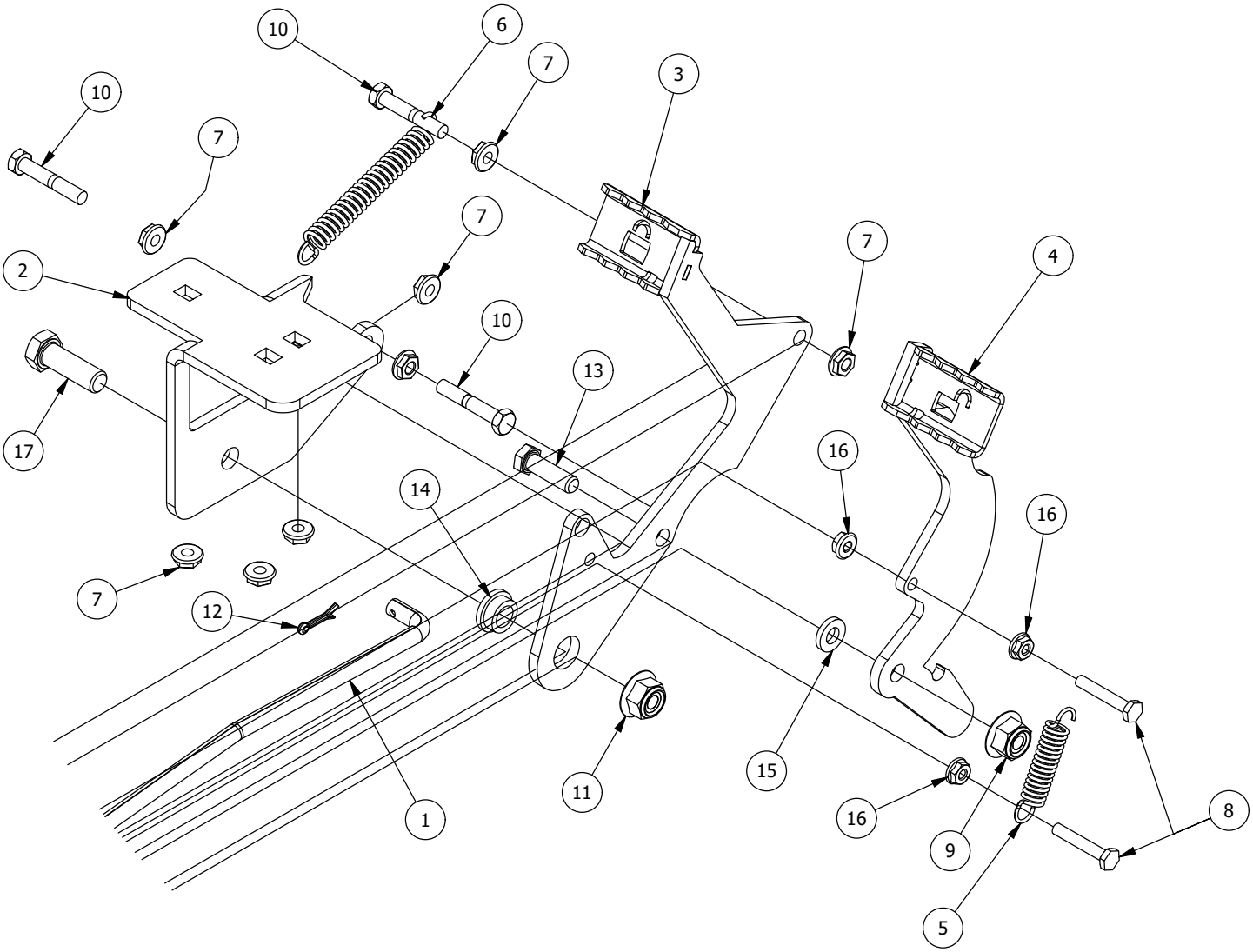

Detail A Parts List			
ITEM	QTY	PART NUMBER	DESCRIPTION
1	1	435-0004-00	Mower Brake Linkage
2	1	439-0009-00	Mower Frame Brake Mounting Bracket
3	1	490-0016-00	Mower Brake Lock Lever Assembly
4	1	490-0017-00	Mower Brake Unlock Lever Assembly
5	1	434-0003-00	Brake Pedal Release Spring
6	1	434-0015-00	Brake Pedal Release Spring
7	11	413-0006-00	5/16-18 HEX FLANGE NUT W/SERR ZINC
8	2	418-0029-00	1/4-20 X 1-1/4 HEX C/S GR 2 ZINC
9	2	413-0013-00	3/8-16 NYLON INSERT FLANGE L/NUT ZC
10	3	418-0027-00	5/16-18 X 1-3/4 HEX C/S GR 2 ZINC
11	10	413-0002-00	1/2-13 NYLON INSERT FLANGE LOCKNUT ZC YELLOW
12	1	420-0001-00	1/8 X 3/4 COTTER PIN ZINC
13	1	418-0030-00	3/8-16 X 1-1/4 HEX C/S GR 2 ZINC
14	8	410-0009-00	1/2" ID X 3/4" OD X 3/8" LENGTH FLANGE BUSHING
15	1	413-0052-00	3/8 ID X 3/4 OD X .125 THK BRONZE WASHER
16	4	413-0012-00	1/4-20 HEX FLANGE NUT W/SERRATIONS ZC YELLOW
17	1	418-0020-00	1/2-13 X 1-1/2 HEX C/S GR 5 ZINC

DETAIL B

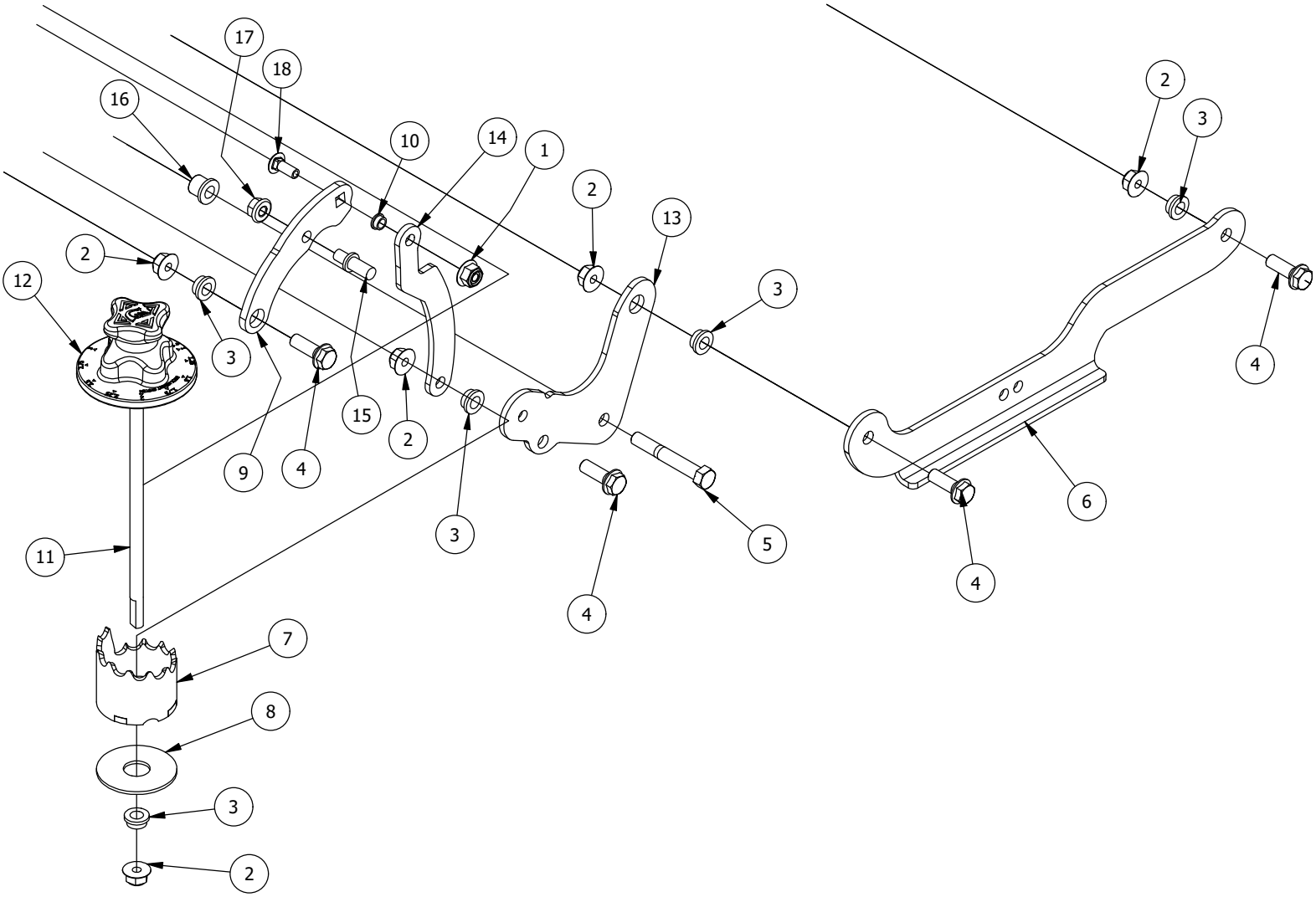

Detail B Parts List			
ITEM	QTY	PART NUMBER	DESCRIPTION
1	2	413-0013-00	3/8-16 NYLON INSERT FLANGE L/NUT ZC
2	10	413-0002-00	1/2-13 NYLON INSERT FLANGE LOCKNUT ZC YELLOW
3	8	410-0009-00	1/2" ID X 3/4" OD X 3/8" LENGTH FLANGE BUSHING
4	6	418-0047-00	1/2-13 X 1-1/2 HEX FLANGE BOLT GR 8 ZINC YELLOW
5	2	418-0042-00	1/2-13 X 3-1/2 HEX C/S GR 5 ZINC YELLOW
6	1	435-0021-00	Mower TTQ Deck Height Arm Right Link
7	1	490-0451-02	2021 RZC Deck Height Cam Assembly
8	1	419-0031-00	1" ID x 3" Nylon Washer
9	1	426-0460-00	RZC Deck Lift Pin Plate
10	1	410-0067-00	Bronze Bushing
11	1	435-0026-00	RZ-C Mower Deck Height Selector Shaft
12	1	445-0004-00	2020 RZ Deck Height Selector Knob
13	1	426-0458-00	RZC Deck Height Bracket Right Side
14	1	426-0459-00	RZC Deck Lift Link Plate
15	1	420-0002-00	Mower Height Selector Pin
16	4	410-0068-00	.502 ID X .753 OD X .75 OAL X1 FL OD X .125 FL BUSHING
17	1	413-0011-00	7/16-14 HEX FLANGE NUT W/SERR ZINC YELLOW
18	1	418-0053-00	3/8-16 X 1 CARRIAGE BOLT ZINC YELLOW

DETAIL C

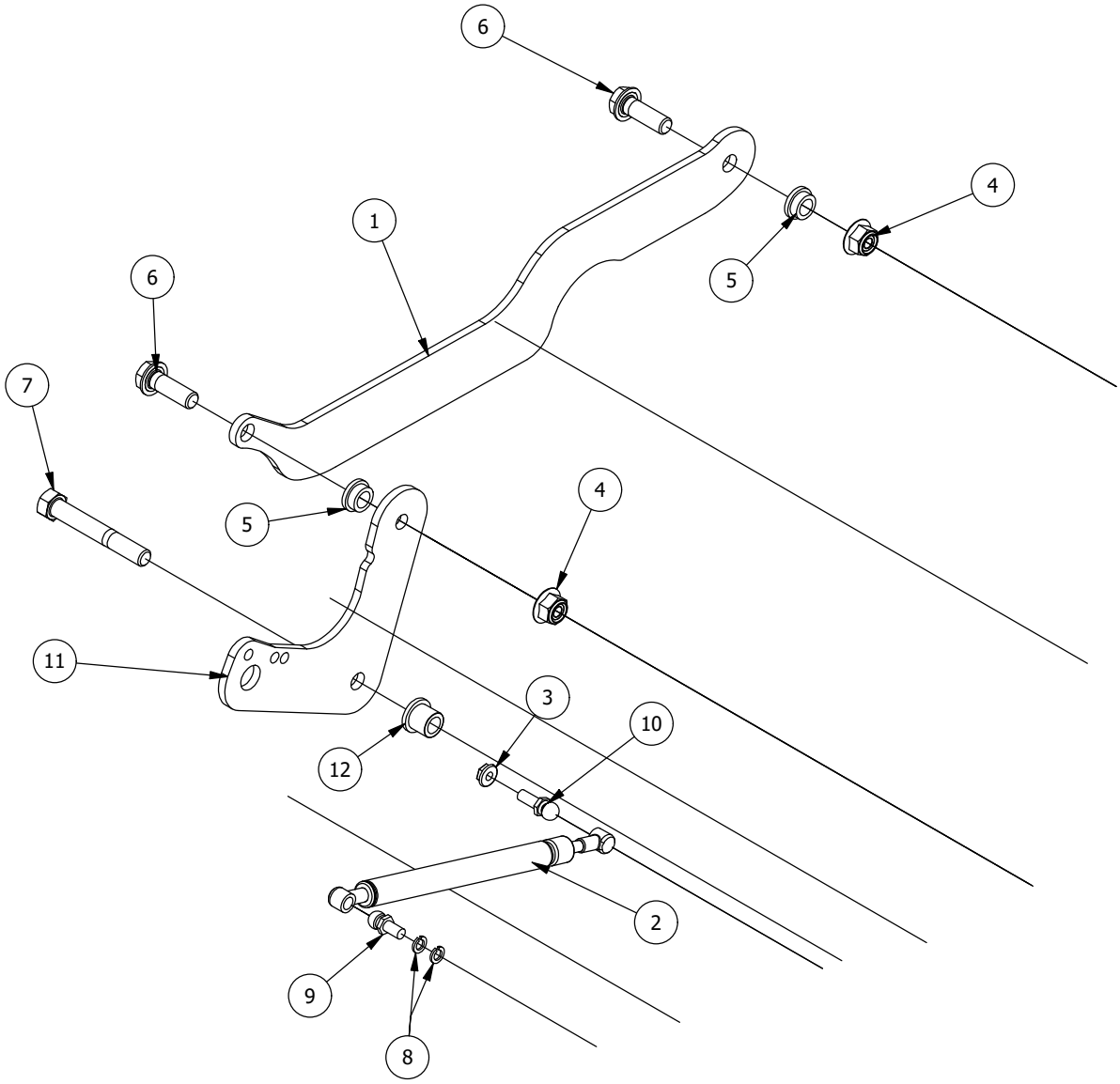

Detail C Parts List			
ITEM	QTY	PART NUMBER	DESCRIPTION
1	1	435-0015-00	Mower Deck Height Left Link Arm
2	1	434-0008-00	RZ Deck Assist Gas Spring
3	11	413-0006-00	5/16-18 HEX FLANGE NUT W/SERR ZINC
4	10	413-0002-00	1/2-13 NYLON INSERT FLANGE LOCKNUT ZC YELLOW
5	8	410-0009-00	1/2" ID X 3/4" OD X 3/8" LENGTH FLANGE BUSHING
6	6	418-0047-00	1/2-13 X 1-1/2 HEX FLANGE BOLT GR 8 ZINC YELLOW
7	2	418-0042-00	1/2-13 X 3-1/2 HEX C/S GR 5 ZINC YELLOW
8	2	419-0009-00	5/16 SPLIT LOCKWASHER ZINC
9	1	487-0005-00	Control Arm Damper Ball Stud
10	1	487-0008-00	Control Arm Damper Ball Stud 3/4" Thread
11	1	431-0008-00	2020 RZ Left Rear Deck Height Control Arm
12	4	410-0068-00	.502 ID X .753 OD X .75 OAL X1 FL OD X .125 FL BUSHING

Seat & Battery Assembly

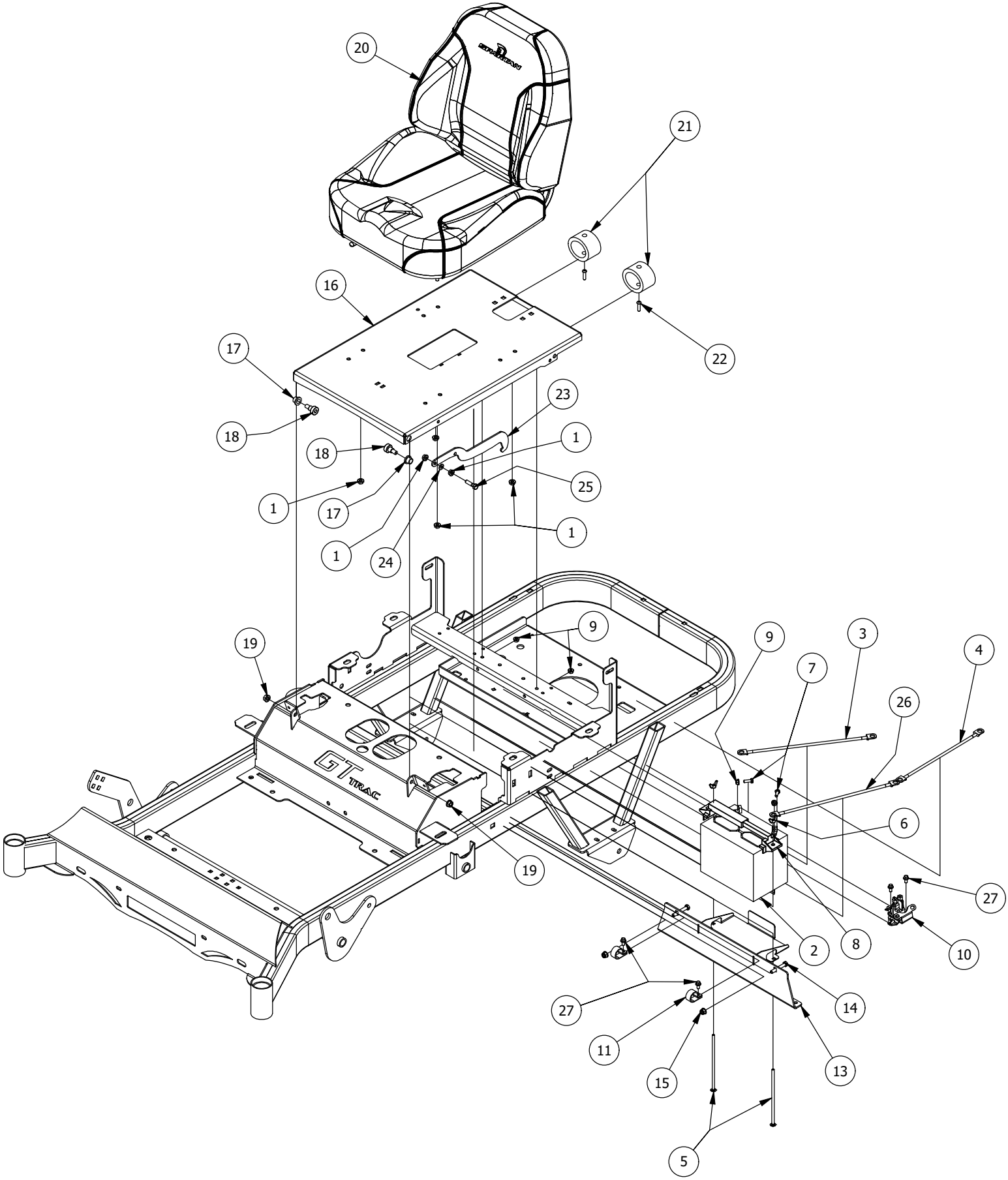

Seat & Battery Assembly			
ITEM	QTY	PART NUMBER	DESCRIPTION
1	6	413-0027-00	5/16-18 NYLON INSERT FLANGE LOCKNUT ZC YELLOW
2	1	468-1004-00	12-V Mower Starter Battery
3	1	486-0017-00	Mower Negative Battery Cable 28" long
4	1	486-0018-00	Mower Start Wire, 12
5	2	418-0034-00	1/4-20 X 7 CARRIAGE BOLT ZINC
6	2	413-0025-00	1/4-20 WING NUT ZINC
7	2	418-0035-00	1/4-20 X 3/4 HEX C/S GR 2 ZINC
8	1	443-0001-00	Battery Hold Down
9	4	413-0026-00	1/4-20 NYLON INSERT FLANGE L/NUT ZINC
10	1	486-0006-00	Mower Starter Solenoid
11	2	472-0002-00	1/2" CUSHIONED LOOP CLAMP
12	1	490-0449-00	CRZ TTQ Frame Assembly
13	1	490-0027-00	Mower TTQ Battery Box Assembly
14	2	618-2071-00	5/16-18X 2" Hex Head Cap Screw
15	2	613-8049-00	5/16-18 Nylon Insert Flange Nut Zinc Orange Nylon
16	1	439-0430-00	RZ Mower Seat Brtk
17	2	410-0010-00	1/2" ID X 5/8" OD X 1/2" LENGTH FLANGE BUSHING
18	2	418-0038-00	1/2 X 1/2 SOCKET SHOULDER BOLT ZC YELLOW
19	2	413-0029-00	3/8-16 NYLON INSERT FLANGE L/NUT ZC YELLOW
20	1	471-0032-00	RZ Seat Standard
21	2	487-0004-00	Seat Suspension Elastomer GBR-7
22	2	418-0039-00	1/4-20 X 1 BUTTON SOCKET C/S 18-8 SS W/ BLACK MAGNI 577
23	1	439-0065-00	Mower Seat Latch Hook
24	1	413-0016-00	.312 ID X .625 OD X .062 THK THRUST BEARING OIL-IMPREG BRNZ
25	1	418-0036-00	5/16-18 X 1-1/4 HEX TAP BOLT ZINC GR8
26	1	486-0016-00	Mower Positive Battery Cable 25" long
27	4	418-0023-00	3/8-16 X 1-1/8 IND HWH W/SERR TRI LOB ZY

Drive Arm Assemblies

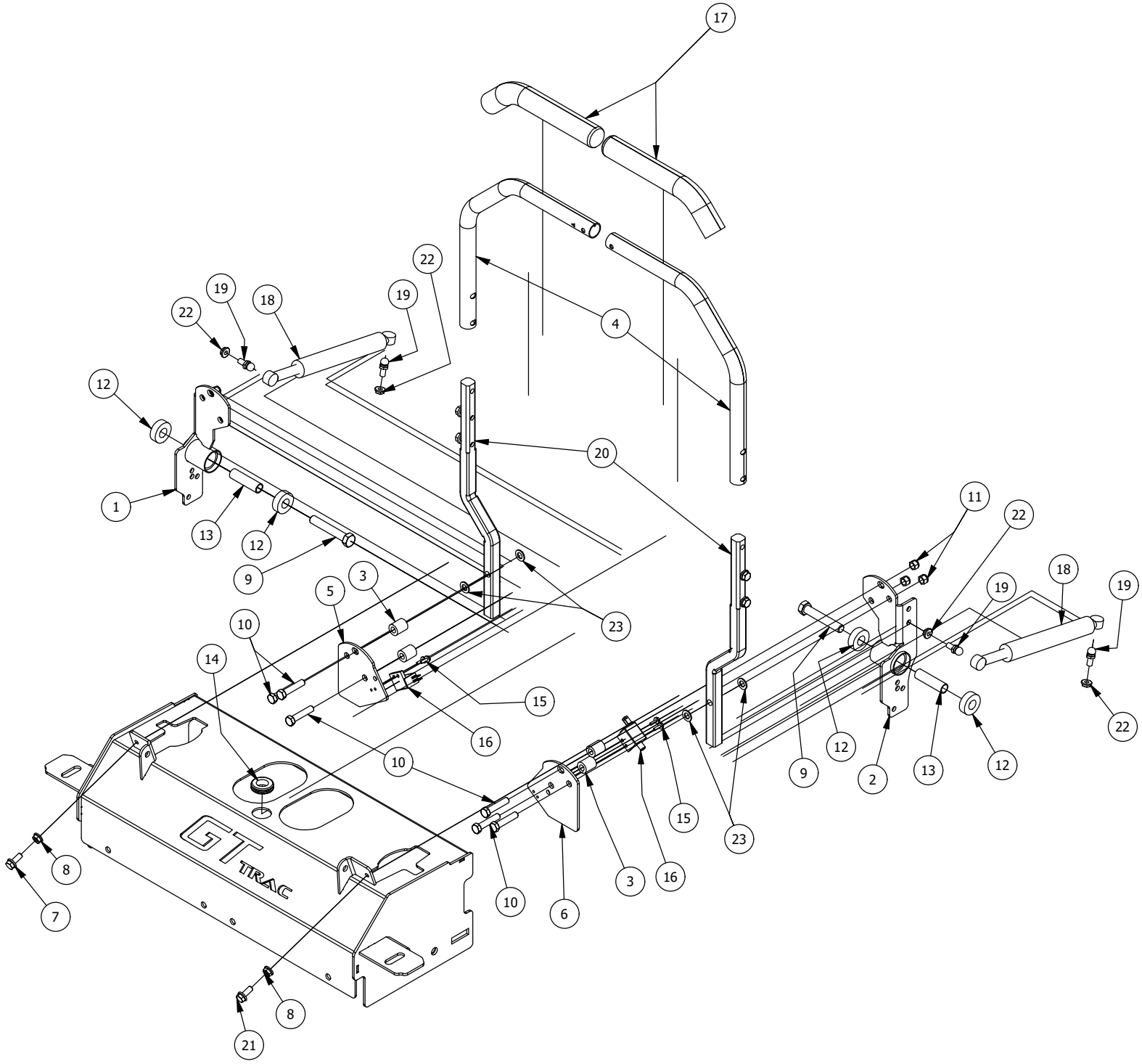

Drive Arm Assemblies			
ITEM	QTY	PART NUMBER	DESCRIPTION
1	1	490-0013-00	Mower Right Drive Arm Bracket Assembly
2	1	490-0012-00	Mower Left Drive Arm Bracket Assembly
3	4	425-0003-00	Mower Drive Arm Spacer
4	2	403-0020-00	Mower Drive Handle Tube
5	1	426-0003-00	Mower Right Control Arm Limit Switch Plate
6	1	426-0002-00	Mower Left Control Arm Limit Switch Plate
7	1	418-0049-00	5/16-18 X 3/4 IND HWH TRI LOB ZINC
8	2	413-0022-00	5/16-18 HEX FLANGE NUT W/SERR ZINC YELLOW
9	2	418-0050-00	1/2-13 X 3 HEX C/S GR 5 ZINC
10	6	418-0051-00	3/8-16 X 1-3/4 HEX C/S GR 2 ZINC
11	6	413-0013-00	3/8-16 NYLON INSERT FLANGE LOCKNUT ZINC
12	4	410-0005-00	5/8" ID X 1-3/8" OD X 7/16" THK BEARING
13	2	425-0004-00	Mower Drive Arm Hub & Deck Lift Arm Spacer
14	1	419-0008-00	3/4" ID X FOR 1-3/16" HOLE FOR 11 GA RUBBER GROMMIT
15	4	418-0032-00	8-32 X 1/2 IND. HWH SLOT TYPE F TCS ZINC
16	2	486-0030-00	Safety Switch
17	2	484-0001-00	Handle Grip
18	2	487-0001-00	Control Arm Damper
19	4	487-0005-00	Control Arm Damper Ball Stud
20	2	431-0001-00	Height Adjustable Drive Arm
21	5	418-0048-00	5/16-18 X 3/4 HEX FLANGE BOLT GR 8 ZC YELLOW
22	4	413-0006-00	5/16-18 HEX FLANGE NUT W/SERR ZINC
23	4	410-0011-00	.375 ID X .750 OD X .062 THK THRUST BEARING OIL-IMPREG BRNZ

Gas Tank Assembly

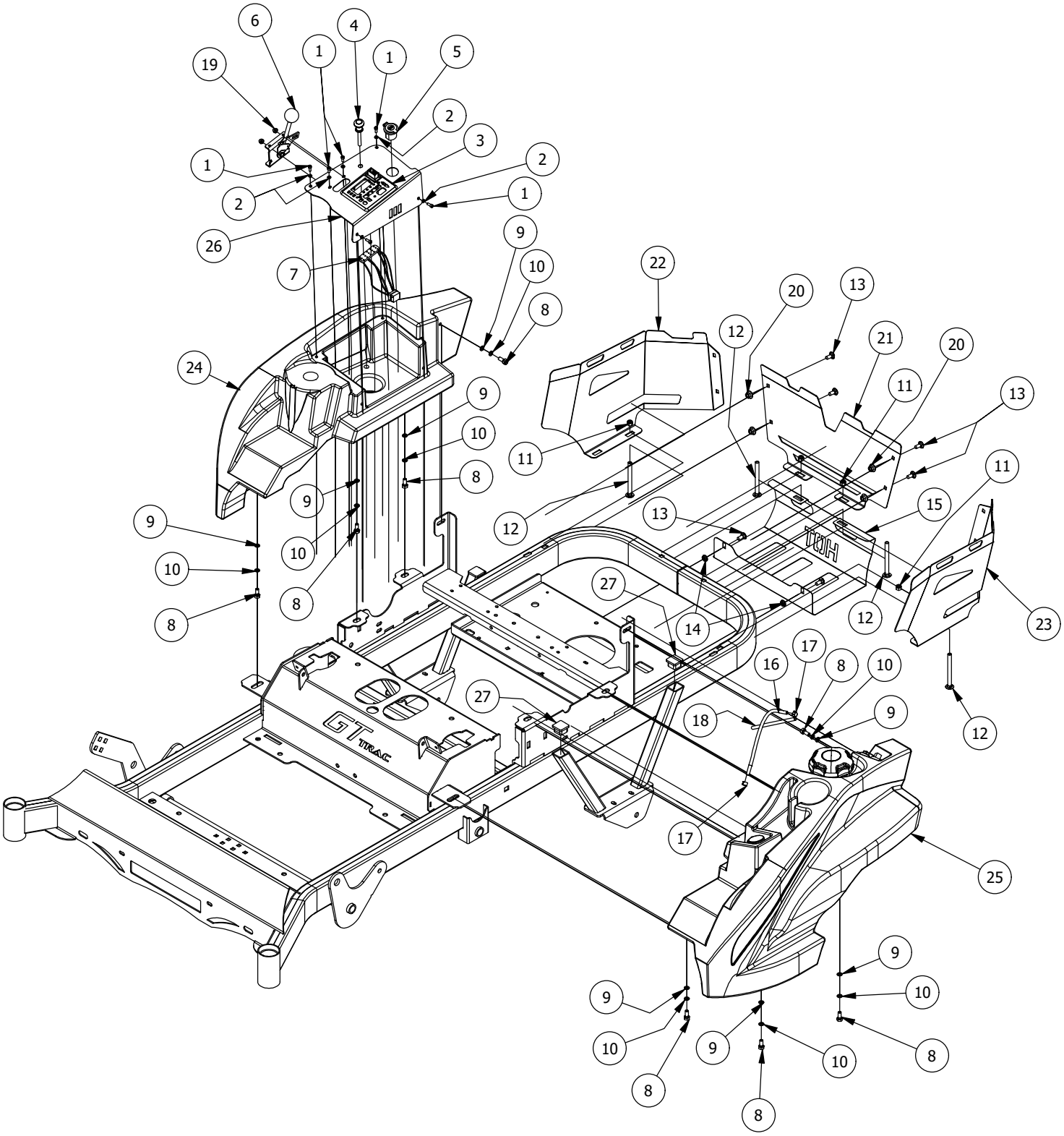

Gas Tank Assembly			
ITEM	QTY	PART NUMBER	DESCRIPTION
1	6	418-0055-00	10-24 X 1/2 SOCKET C/S 18-8 SS
2	6	419-0011-00	#10 SPLIT LOCKWASHER 18-8 SS
3	1	486-0004-00	Mower Control Console, Carbureted Engine
4	1	464-0002-00	Choke Cable
5	1	677-2075-00	12 Volt Auxiliary Plug
6	1	464-0001-00	Mower Throttle Cable Assembly w / Handle
7	1	486-0009-00	RZ/RZ-Pro Wiring Harness 26Kohler/Briggs/FR730 Engines
8	8	418-0054-00	5/16-18 X 3/4 HEX C/S ZINC
9	8	419-0007-00	5/16 Flat Washer
10	8	419-0009-00	5/16 SPLIT LOCKWASHER ZINC
11	4	413-0013-00	3/8-16 NYLON INSERT FLANGE LOCKNUT ZINC
12	4	418-0018-00	3/8-16 X 4 CARRIAGE BOLT ZINC/YEL
13	6	418-0008-00	5/16-18 X 3/4 CARRIAGE BOLT ZINC
14	2	413-0006-00	5/16-18 HEX FLANGE NUT W/SERR ZINC
15	1	439-0115-00	RZ Mower Muffler Guard
16	1	751-1014-00	1/4 Fuel Line - Low Perm
17	2	472-0004-00	1/2" (#8) Hose Clamp
18	1	451-0002-00	Mower Fuel Tank Black 3/16" Vent Tube
19	2	413-0008-00	10-24 NYLON INSERT LOCKNUT 18-8 SS
20	4	413-0066-00	5/16-24 Hex Flange Nut Serr Yello Zinc
21	1	439-0494-00	2021 CRZ Rear Cover Center Plate
22	1	439-0496-00	2021 RZC Rear Cover Right Side
23	1	439-0495-00	2021 RZC Rear Cover Left Side
24	1	467-0022-00	2020 RZ Mower Console Assembly Right
25	1	467-0021-00	2021 RZ Mower Fuel Tank Assembly Left
26	1	439-0491-00	RZC Gas Tank Console
27	4	714-1002-00	1-1/4"x1-1/4" Black Tube Plug

Transmission Assembly

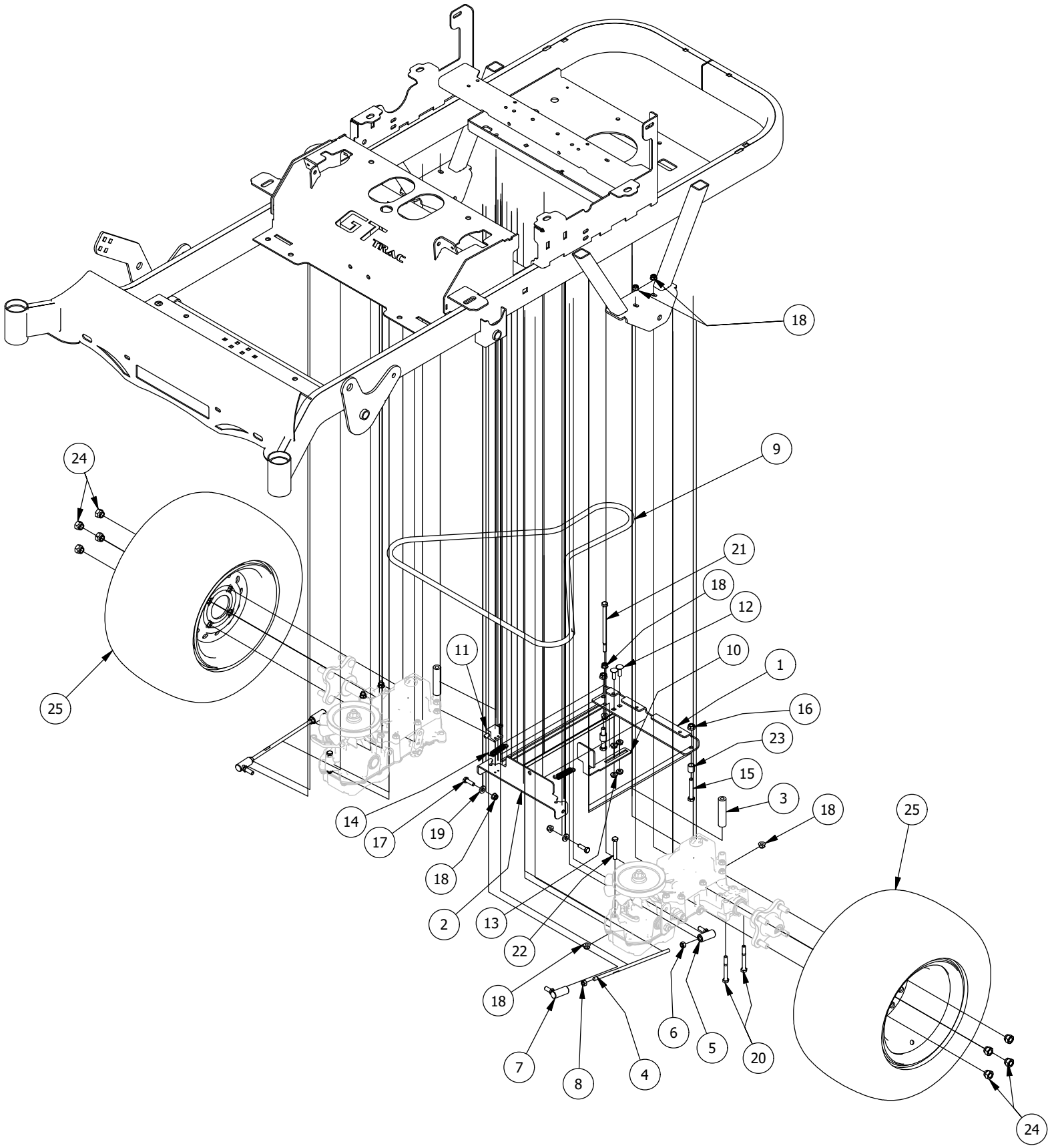

Transmission Assembly			
ITEM	QTY	PART NUMBER	DESCRIPTION
1	1	439-0098-00	Mower TTQ Transmission Mount Brace
2	1	439-0018-00	Mower TTQ Brake Rod Bracket 2020
3	2	425-0023-00	Mower TTQ Hydrostatic Transmission Rear Spacer
4	2	435-0020-00	Mower Drive Arm Rod TTQ 400 & 300 Trasmission
5	2	410-0001-00	Control Arm Rod End, Right
6	2	413-0035-00	5/16-24 HEX NUT ZINC
7	2	410-0002-00	Control Arm Rod End, Left
8	2	413-0003-00	5/16 Hex Nut Left hand thread
9	1	461-0015-00	RZ TuffTorq Pump Belt 77.5" A belt
10	1	439-0066-00	Mower Standard Transmission Brake Interlock Bracket
11	1	486-0030-00	Safety Switch
12	2	418-0010-00	5/16-18 X 1 CARRIAGE BOLT ZC/YEL
13	4	413-0006-00	5/16-18 HEX FLANGE NUT W/SERR ZINC
14	2	434-0003-00	Brake Pedal Release Spring
15	2	418-0107-00	3/8-16 X 2-1/4 HEX FLANGE BOLT GR 8 ZC YELLOW
16	2	413-0020-00	3/8-16 HEX FLANGE NUT W/SERR ZINC YELLOW
17	2	418-0108-00	5/16 x1 Hex C/S (GR8) ZC/Yel
18	12	613-8049-00	5/16-18 Nylon Insert Flange Nut Zinc Orange Nylon
19	2	413-0052-00	3/8 ID X 3/4 OD X .125 THK BRONZE WASHER
20	4	418-0093-00	5/16-18 UNC-2.75 Hex Bolt TTQ Transmission
21	3	418-0092-00	5/16-18 UNC-5.5 Hex Bolt TTQ Transmission
22	2	618-2034-00	5/16" x 2-1/4" Hex Hd Cap Scr.
23	2	725-1011-00	11/16"x 1/2" x 5/8" Spacer
24	8	413-0015-00	1/2-20 Lugnut for Aluminum Wheels
25	2	422-0053-00	Turf Armor 22x11-10 Rear Tire/Wheel Assembly

Clutch & Idler Pulley Assembly

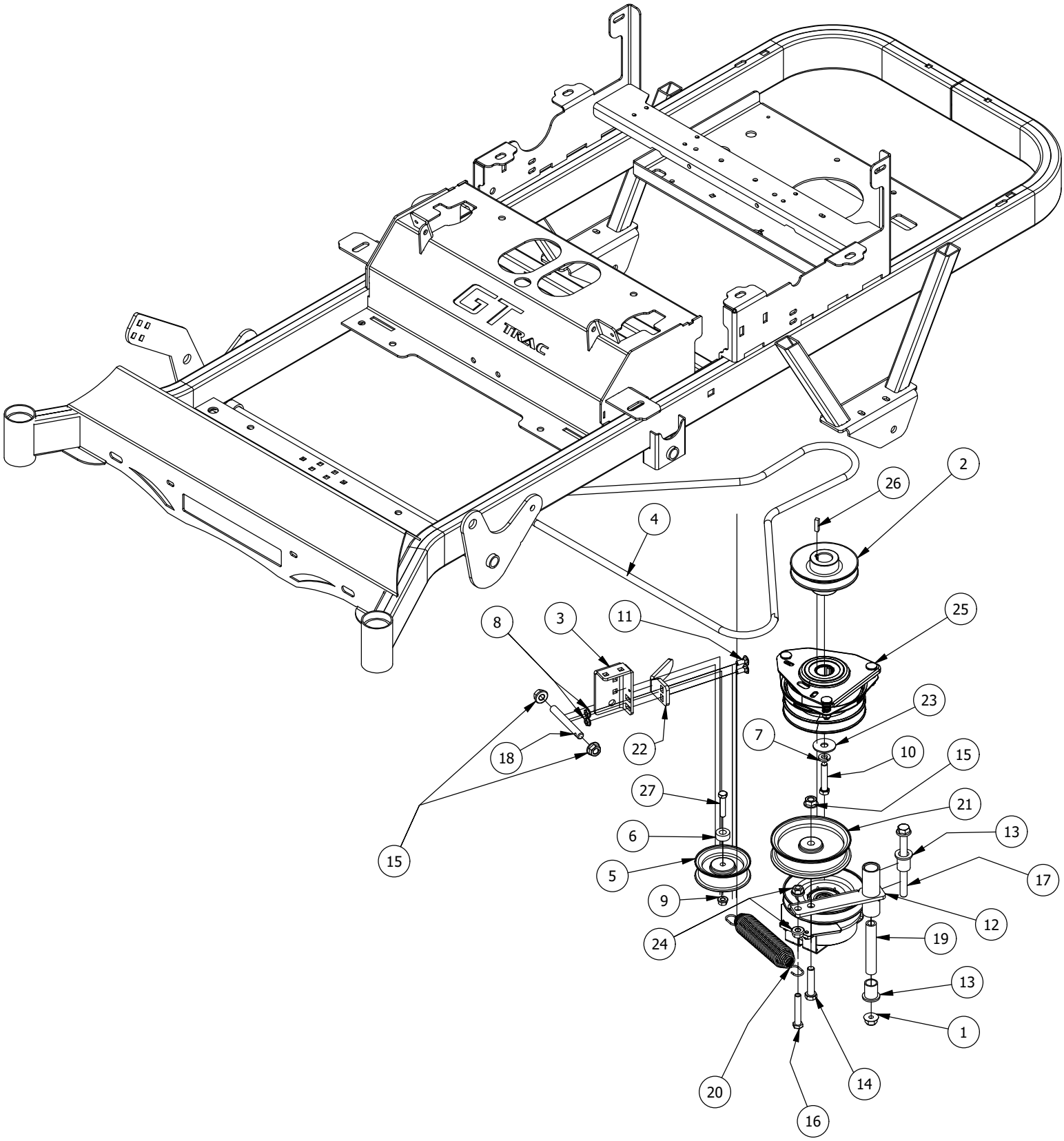

Clutch & Height Indicator Assembly			
ITEM	QTY	PART NUMBER	DESCRIPTION
1	1	413-0002-00	1/2-13 NYLON INSERT FLANGE LOCKNUT ZC YELLOW
2	1	433-0002-00	Drive Pulley, B Belt
3	1	439-0244-00	Deck Idler Puller Tensioning Bracket
4	1	461-0015-00	RZ TuffTorq Pump Belt 77.5" A belt
5	1	433-0012-00	4" Diesel and Economy Mower Idler Pulley
6	1	425-0007-00	Mower Pulley Spacer
7	1	419-0005-00	7/16 SPLIT LOCKWASHER GR 8 ZC YELLOW
8	2	413-0006-00	5/16-18 HEX FLANGE NUT W/SERR ZINC
9	1	413-0020-00	3/8-16 HEX FLANGE NUT W/SERR ZINC YELLOW
10	1	418-0223-00	TTQ Clutch Bolt
11	2	418-0008-00	5/16-18 X 3/4 CARRIAGE BOLT ZINC
12	1	490-0018-00	Mower Pump Idler Assembly
13	2	410-0007-00	3/4" ID X 15/16" OD X 1-1/8" LENGTH FLANGE BUSHING
14	1	418-0012-00	1/2-13 X 2-1/4 HEX C/S GR 5 ZINC
15	3	413-0005-00	1/2-13 HEX FLANGE NUT W/SERR ZINC YELLOW
16	1	418-0013-00	7/16-14 X 2-1/2 HEX C/S GR 5 ZINC
17	1	418-0009-00	1/2-13 X 5-1/2 HEX FLANGE BOLT GR 8 ZY
18	1	430-0001-00	Mower Pump Spring Tensioner
19	1	425-0006-00	Mower Inner Idler Spacer
20	1	434-0007-00	2019 Mower Deck Spring
21	1	433-0013-00	5-3/4” Idler Pulley, 7/16” Spacer Assembly
22	1	439-0493-00	2021 TTQ Mower Ogura Clutch Bracket
23	1	419-0001-00	1/2" X 1-5/8 BELLEVILLE CUP WASHER ZINC YELLOW
24	2	413-0011-00	7/16-14 HEX FLANGE NUT W/SERR ZINC YELLOW
25	1	470-0004-00	Mower TTQ Ogura Clutch
26	1	442-0001-00	1/4 X 1 SQUARE KEY STOCK
27	1	618-2008-00	3/8"-16X1-3/4" Gr 8 C/S

48" Deck Assembly 1

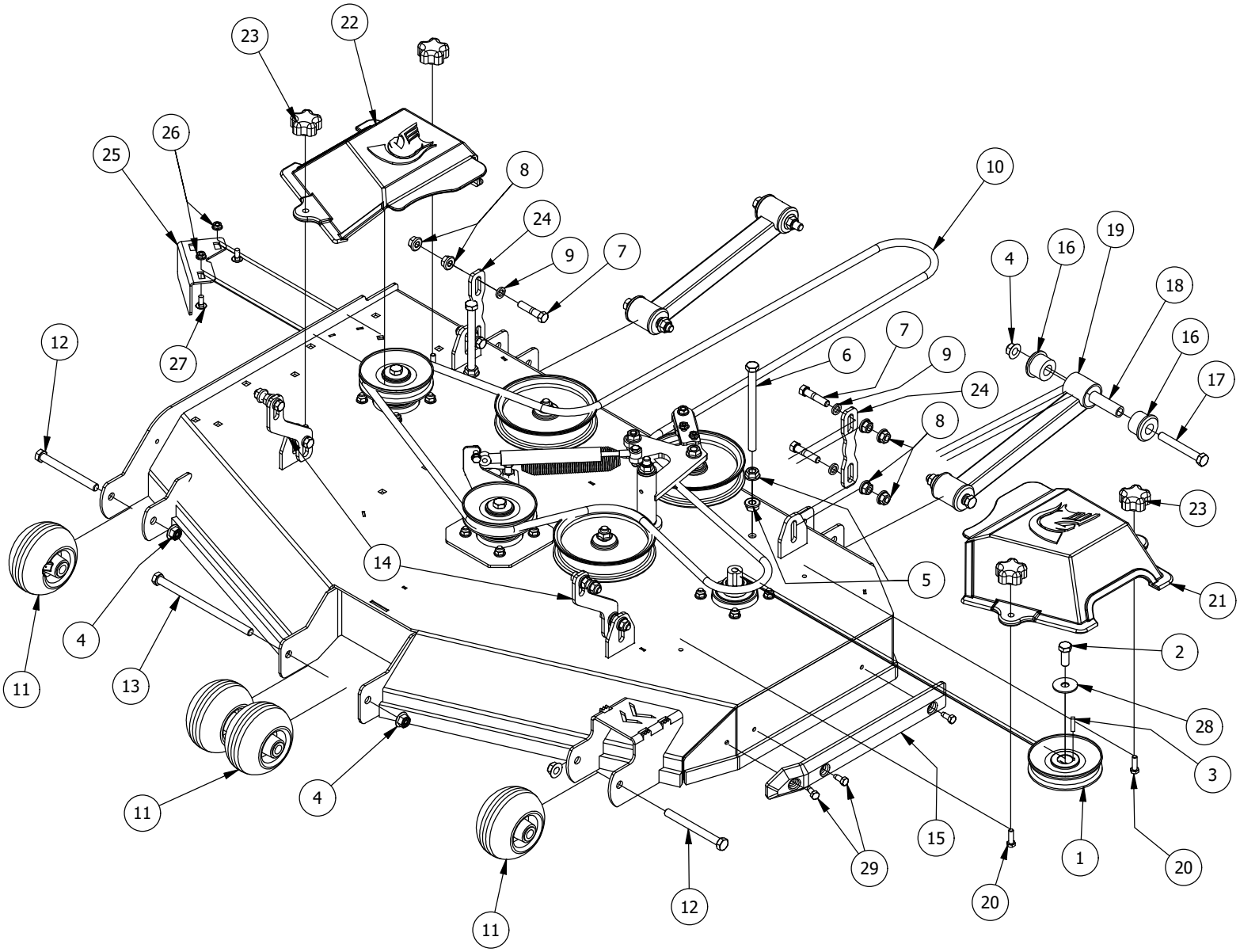

48" Deck Assembly 1			
ITEM	QTY	PART NUMBER	DESCRIPTION
1	3	433-0017-00	48" Deck Pulley
2	3	418-0006-00	1/2-20 X 1-1/4 HEX C/S GR 5 ZINC
3	3	442-0001-00	1/4 X 1 SQUARE KEY STOCK
4	8	413-0002-00	1/2-13 NYLON INSERT FLANGE NUT ZINC YELLOW
5	8	413-0005-00	1/2-13 HEX FLANGE NUT W/SERR ZINC YELLOW
6	2	418-0044-00	1/2-13 X 6-1/2 HEX C/S GR 8 ZINC YELLOW
7	8	418-0046-00	7/16-14 X 2 HEX C/S GR 5 ZINC YELLOW
8	17	413-0011-00	7/16-14 HEX FLANGE NUT W/SERR ZINC YELLOW
9	8	419-0010-00	.443 ID X .750 OD X .125 THK NYLON BLACK
10	1	461-0009-00	48" Mower Deck Belt; HB x 144" Effective Length
11	4	422-0001-00	Anti-Scalp Wheel
12	2	418-0016-00	1/2-13 X 5 HEX C/S GR 2 ZINC YELLOW
13	1	418-0015-00	1/2-13 X 8-1/2 HEX C/S GR 2 ZINC YELLOW
14	2	435-0017-00	RZ Mower 48" Front Height Arm Connecting Link
15	1	429-0001-00	Mower Nylon Deck Guard
16	8	732-2008-00	Black A90 Suspension Bushing
17	4	418-0021-00	1/2-13 X 3-3/4 HEX C/S GR 5 ZINC
18	4	732-2001-00	Large MTV A-Arm Bushing Sleeve
19	2	490-0047-03	2019 all RZ Deck Stabilizer assembly
20	5	418-0108-00	5/16 x1 Hex C/S (GR8) ZC/Yel
21	1	414-0018-00	48" & 54" Deck Left Pulley Cover
22	1	414-0019-00	48" & 54" Deck Right Pulley Cover
23	4	445-0005-00	5/16-18 5-LOBE (STAR) FEMALE SOFT TOUCH KNOB (1.90 DIA) BLK
24	2	435-0013-03	RZ Mower Deck Actuator Connecting Link
25	1	439-0397-03	2020 RZ 48 Deck wiper Brkt
26	2	413-0022-00	5/16-18 HEX FLANGE NUT W/SERR ZINC YELLOW
27	2	418-0008-00	5/16-18 X 3/4 CARRIAGE BOLT ZINC
28	3	419-0001-00	1/2" X 1-5/8 BELLEVILLE CUP WASHER ZINC YELLOW
29	3	418-0262-00	5/16-18 X 3/4 IND HWH UNSLOT (F) TCS ZC/Y

48" Deck Assembly 2

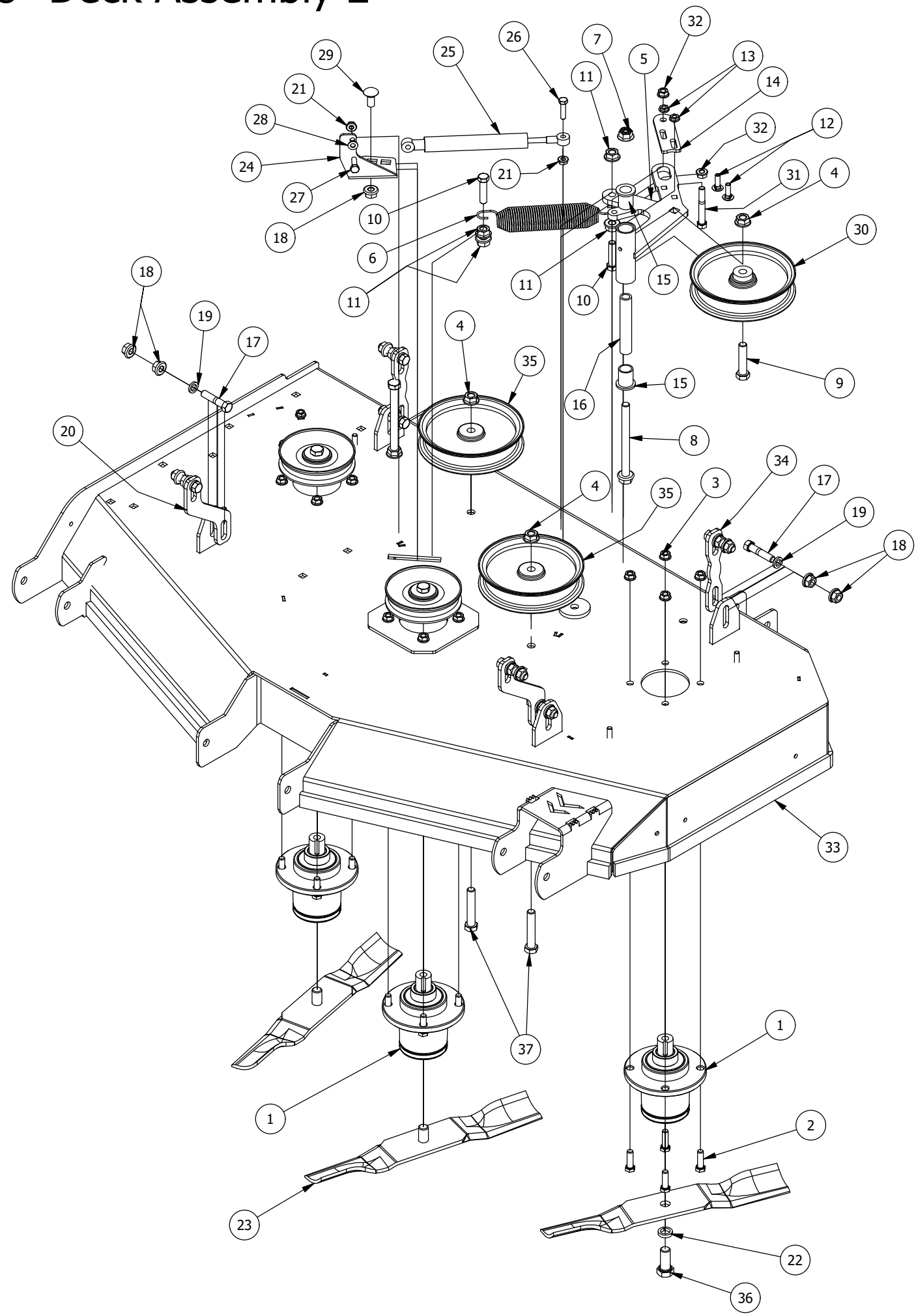

48" Deck Assembly 2			
ITEM	QTY	PART NUMBER	DESCRIPTION
1	3	437-0006-00	RZ Mower Deck Spindle Assy
2	12	418-0005-00	3/8-16 x 1-1/4 Hex Bolt GR5
3	12	413-0004-00	3/8-16 HEX FLANGE NUT W/SERR ZINC
4	3	413-0010-00	1/2-13 HEX FLANGE NUT W/SERR ZINC
5	1	490-0019-03	Mower Deck Idler Pulley Arm Assembly
6	1	434-0007-00	2019 Mower Deck Spring
7	8	413-0002-00	1/2-13 NYLON INSERT FLANGE NUT ZINC YELLOW
8	1	418-0009-00	1/2-13 X 5-1/2 HEX FLANGE BOLT GR 8 ZY
9	1	418-0012-00	1/2-13 X 2-1/4 HEX C/S GR 5 ZINC
10	2	418-0011-00	7/16-14X 1-3/4 HEX C/S GR5 ZINC Yellow
11	8	413-0005-00	1/2-13 HEX FLANGE NUT W/SERR ZINC YELLOW
12	2	418-0010-00	5/16-18 X 1 CARRIAGE BOLT ZC/YEL
13	2	413-0006-00	5/16-18 HEX FLANGE NUT W/SERR ZINC
14	1	439-0257-03	Deck Idler Pulley Belt Retainer Brkt
15	2	410-0007-00	3/4" ID X 15/16" OD X 1-1/8" LENGTH FLANGE BUSHING
16	1	425-0006-00	Mower Inner Idler Spacer
17	8	418-0046-00	7/16-14 X 2 HEX C/S GR 5 ZINC YELLOW
18	17	413-0011-00	7/16-14 HEX FLANGE NUT W/SERR ZINC YELLOW
19	8	419-0010-00	.443 ID X .750 OD X .125 THK NYLON BLACK
20	2	435-0017-03	RZ Mower 48" Front Height Arm Connecting Link
21	2	413-0027-00	5/16-18 NYLON INSERT FLANGE LOCKNUT ZC YELLOW
22	3	419-0004-00	5/8 SPLIT LOCKWASHER ZINC
23	3	438-0004-00	48" Mower Deck Blade
24	1	439-0344-03	48" Belt Deck Idler Damper Mounting Bracket
25	1	434-0009-00	Idler Gas Spring
26	1	418-0109-00	5/16- 18 x 1 1/4 Hex C/S (GR.8) ZC/Yel
27	5	418-0108-00	5/16 x1 Hex C/S (GR8) ZC/Yel
28	1	413-0016-00	.312 ID X .625 OD X .062 THK THRUST BEARING OIL-IMPREG BRNZ
29	1	418-0017-00	7/16-14 X 1 CARRIAGE BOLT ZINC
30	1	433-0014-00	6-3/4” Idler Pulley, 7/16” Spacer Assembly
31	1	618-2078-00	3/8-16 x 2-3/4 Hex C/S GR2 Zinc
32	2	413-0020-00	3/8-16 HEX FLANGE NUT W/SERR ZINC YELLOW
33	1	490-0065-03	2020 48" RZ Deck Assembly
34	2	435-0013-03	RZ Mower Deck Actuator Connecting Link
35	2	433-0015-00	6-3/4” Idler Pulley, 15/16” Spacer Assembly
36	3	418-0078-00	5/8-11 X 1-1/2 HEX C/S GR 8 ZC YELLOW
37	2	418-0246-00	1/2-13 x 2-3/4 Hex Flange Bolt (GR.8) ZC/YEL

54" Deck Assembly 1

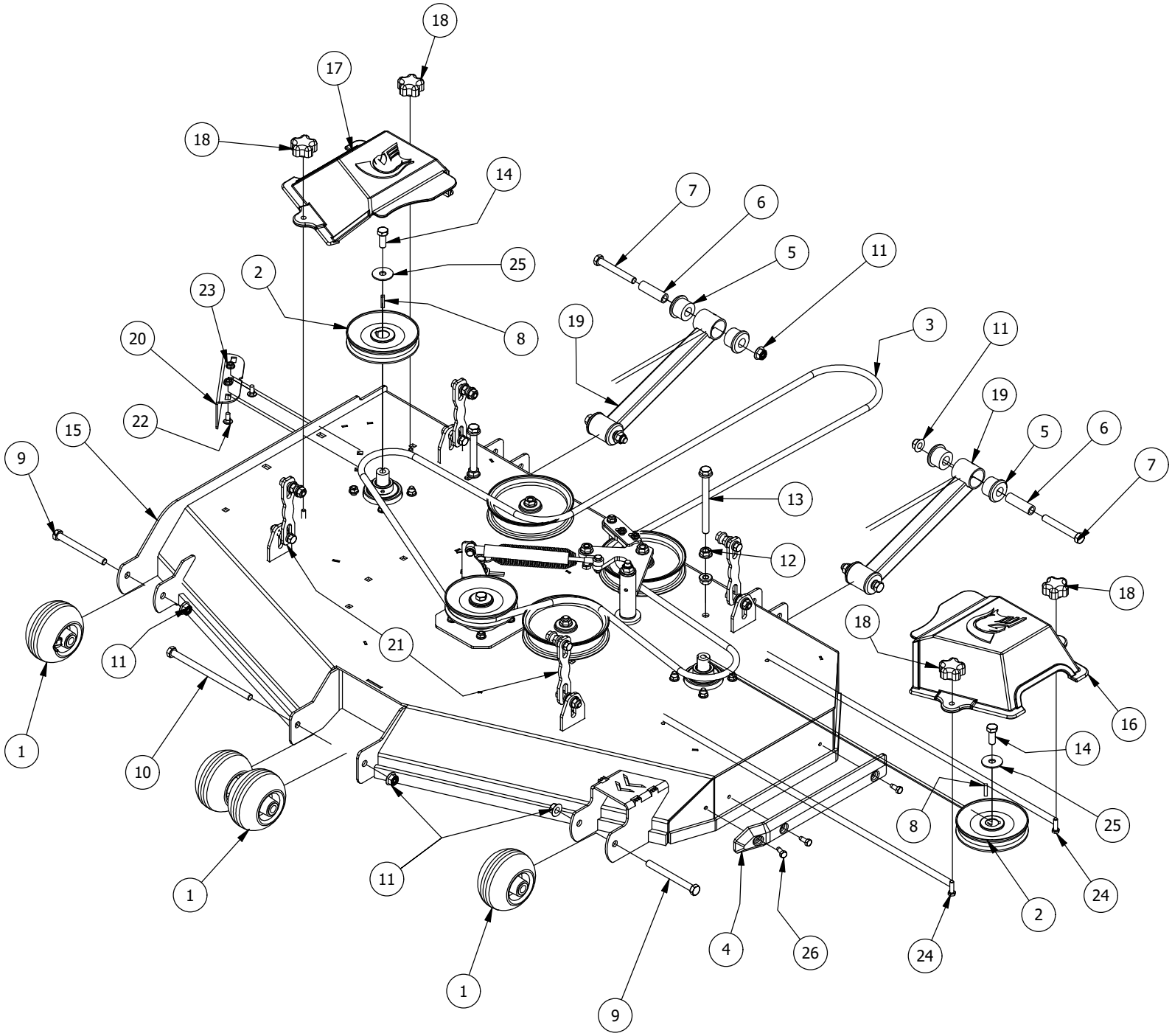

54" Deck Assembly 1			
ITEM	QTY	PART NUMBER	DESCRIPTION
1	4	422-0001-00	Anti-Scalp Wheel
2	3	433-0004-00	Deck Pulley 54"
3	1	461-0001-00	54" Mower Deck Belt, HB x 153.5" Effective Length
4	1	429-0001-00	Mower Nylon Deck Guard
5	8	732-2008-00	Black A90 Suspension Bushing
6	4	732-2001-00	Large MTV A-Arm Bushing Sleeve
7	4	418-0021-00	1/2-13 X 3-3/4 HEX C/S GR 5 ZINC
8	3	442-0001-00	1/4 X 1 SQUARE KEY STOCK
9	2	418-0016-00	1/2-13 X 5 HEX C/S GR 2 ZINC YELLOW
10	1	418-0015-00	1/2-13 X 8-1/2 HEX C/S GR 2 ZINC YELLOW
11	8	413-0002-00	1/2-13 NYLON INSERT FLANGE NUT ZINC YELLOW
12	8	413-0005-00	1/2-13 HEX FLANGE NUT W/SERR ZINC YELLOW
13	3	418-0009-00	1/2-13 X 5-1/2 HEX FLANGE BOLT GR 8 ZY
14	3	418-0006-00	1/2-20 X 1-1/4 HEX C/S GR 5 ZINC
15	1	490-0064-03	2020 54" RZ Deck Assembly
16	1	414-0018-00	48" & 54" Deck Left Pulley Cover
17	1	414-0019-00	48" & 54" Deck Right Pulley Cover
18	4	445-0005-00	5/16-18 5-LOBE (STAR) FEMALE SOFT TOUCH KNOB (1.90 DIA) BLK
19	2	490-0047-03	2019 all RZ Deck Stabilizer assembly
20	1	439-0399-03	2020 RT&SRT/RZ 54 Deck wiper Brkt
21	4	435-0013-03	RZ Mower Deck Actuator Connecting Link
22	2	418-0008-00	5/16-18 X 3/4 CARRIAGE BOLT ZINC
23	2	413-0022-00	5/16-18 HEX FLANGE NUT W/SERR ZINC YELLOW
24	4	418-0108-00	5/16 x1 Hex C/S (GR8) ZC/Yel
25	3	419-0001-00	1/2" X 1-5/8 BELLEVILLE CUP WASHER ZINC YELLOW
26	3	418-0262-00	5/16-18 X 3/4 IND HWH UNSLOT (F) TCS ZC/Y

54" Deck Assembly 2

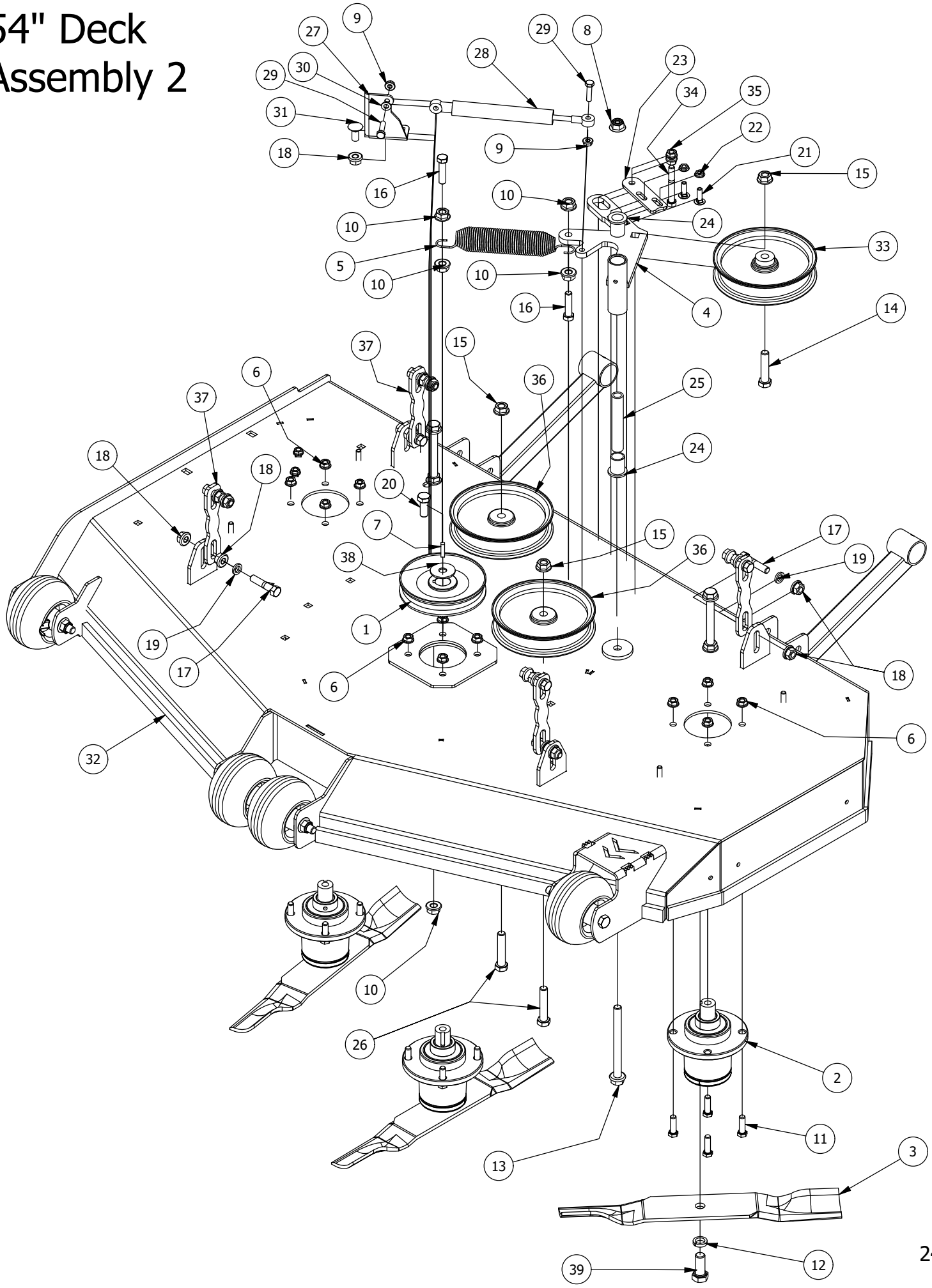

54" Deck Assembly 2			
ITEM	QTY	PART NUMBER	DESCRIPTION
1	3	433-0004-00	Deck Pulley 54"
2	3	437-0006-00	RZ Mower Deck Spindle Assy
3	3	438-0001-00	54" Mower Deck Blade
4	1	490-0019-03	Mower Deck Idler Pulley Arm Assembly
5	1	434-0007-00	2019 Mower Deck Spring
6	12	413-0004-00	3/8-16 HEX FLANGE NUT W/SERR ZINC
7	3	442-0001-00	1/4 X 1 SQUARE KEY STOCK
8	8	413-0002-00	1/2-13 NYLON INSERT FLANGE NUT ZINC YELLOW
9	2	413-0027-00	5/16-18 NYLON INSERT FLANGE LOCKNUT ZC YELLOW
10	8	413-0005-00	1/2-13 HEX FLANGE NUT W/SERR ZINC YELLOW
11	12	418-0005-00	3/8-16 x 1-1/4 Hex Bolt GR5
12	3	419-0004-00	5/8 SPLIT LOCKWASHER ZINC
13	3	418-0009-00	1/2-13 X 5-1/2 HEX FLANGE BOLT GR 8 ZY
14	1	418-0012-00	1/2-13 X 2-1/4 HEX C/S GR 5 ZINC
15	3	413-0010-00	1/2-13 HEX FLANGE NUT W/SERR ZINC
16	2	418-0011-00	7/16-14X 1-3/4 HEX C/S GR5 ZINC Yellow
17	8	418-0046-00	7/16-14 X 2 HEX C/S GR 5 ZINC YELLOW
18	17	413-0011-00	7/16-14 HEX FLANGE NUT W/SERR ZINC YELLOW
19	8	419-0010-00	.443 ID X .750 OD X .125 THK NYLON BLACK
20	3	418-0006-00	1/2-20 X 1-1/4 HEX C/S GR 5 ZINC
21	2	418-0010-00	5/16-18 X 1 CARRIAGE BOLT ZC/YEL
22	2	413-0006-00	5/16-18 HEX FLANGE NUT W/SERR ZINC
23	1	439-0257-03	Deck Idler Pulley Belt Retainer Brkt
24	2	410-0007-00	3/4" ID X 15/16" OD X 1-1/8" LENGTH FLANGE BUSHING
25	1	425-0006-00	Mower Inner Idler Spacer
26	2	418-0014-00	1/2-13 X 2-1/2 HEX FLANGE BOLT GR 8 ZC YELLOW
27	1	439-0335-03	Deck Belt Idler Damper Mounting Bracket
28	1	434-0009-00	Idler Gas Spring
29	2	418-0109-00	5/16- 18 x 1 1/4 Hex C/S (GR.8) ZC/Yel
30	1	413-0016-00	.312 ID X .625 OD X .062 THK THRUST BEARING OIL-IMPREG BRNZ
31	1	418-0017-00	7/16-14 X 1 CARRIAGE BOLT ZINC
32	1	490-0064-03	2020 54" RZ Deck Assembly
33	1	433-0014-00	6-3/4” Idler Pulley, 7/16” Spacer Assembly
34	1	618-2078-00	3/8-16 x 2-3/4 Hex C/S GR2 Zinc
35	2	413-0020-00	3/8-16 HEX FLANGE NUT W/SERR ZINC YELLOW
36	2	433-0015-00	6-3/4” Idler Pulley, 15/16” Spacer Assembly
37	4	435-0013-03	RZ Mower Deck Actuator Connecting Link
38	3	419-0001-00	1/2" X 1-5/8 BELLEVILLE CUP WASHER ZINC YELLOW
39	3	418-0078-00	5/8-11 X 1-1/2 HEX C/S GR 8 ZC YELLOW

61" Deck Assembly 1

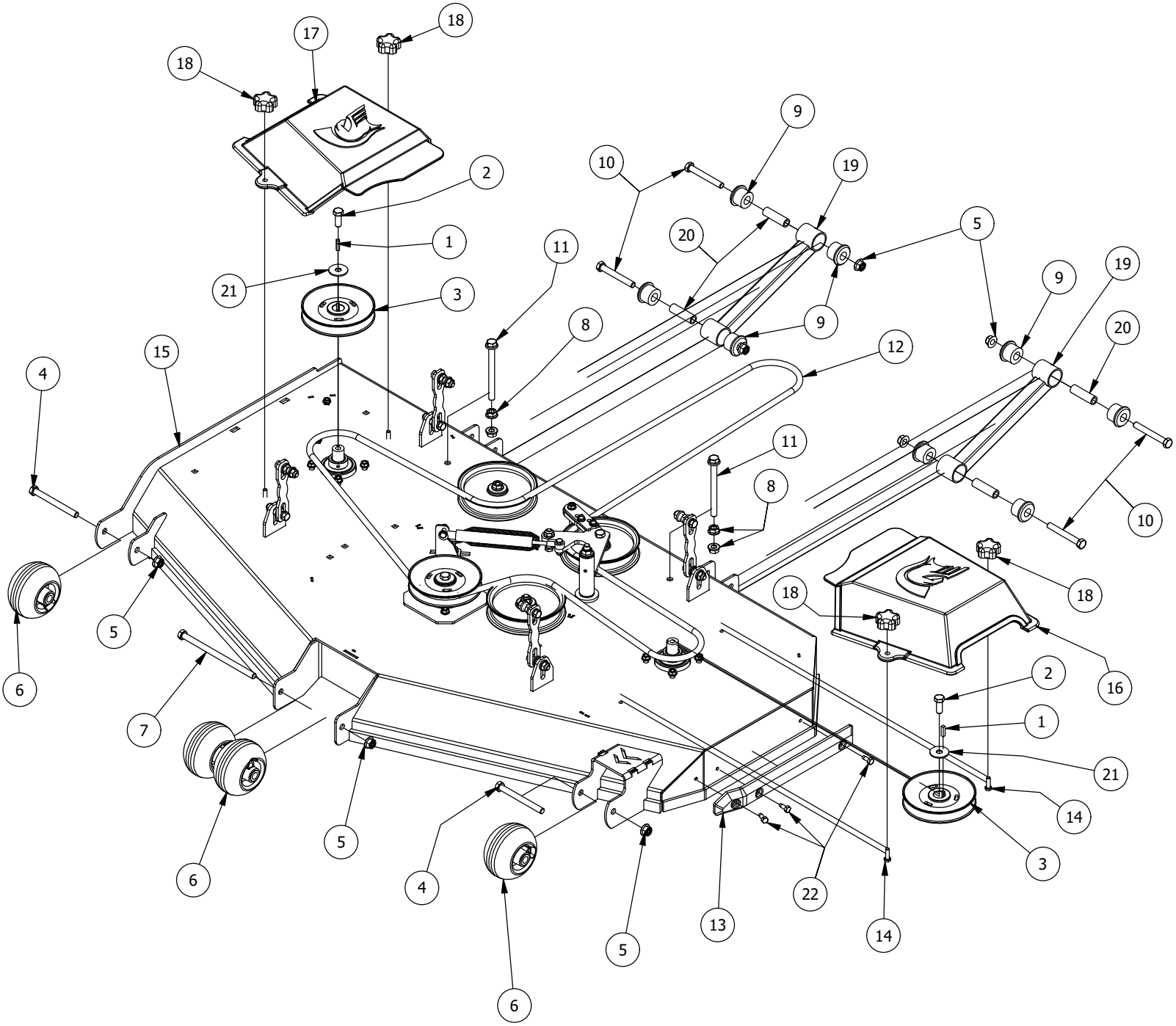

61 Deck Assembly 1			
ITEM	QTY	PART NUMBER	DESCRIPTION
1	3	442-0001-00	1/4 X 1 SQUARE KEY STOCK
2	3	418-0006-00	1/2-20 X 1-1/4 HEX C/S GR 5 ZINC
3	3	433-0003-00	Deck Pulley 61"
4	2	418-0016-00	1/2-13 X 5 HEX C/S GR 2 ZINC YELLOW
5	8	413-0002-00	1/2-13 NYLON INSERT FLANGE NUT ZINC YELLOW
6	4	422-0001-00	Anti-Scalp Wheel
7	1	418-0015-00	1/2-13 X 8-1/2 HEX C/S GR 2 ZINC YELLOW
8	4	413-0005-00	1/2-13 HEX FLANGE NUT W/SERR ZINC YELLOW
9	8	732-2008-00	Black A90 Suspension Bushing
10	4	418-0021-00	1/2-13 X 3-3/4 HEX C/S GR 5 ZINC
11	3	418-0009-00	1/2-13 X 5-1/2 HEX FLANGE BOLT GR 8 ZY
12	1	461-0002-00	61" Mower Deck Belt, HB x 167.9" Effective Length
13	1	429-0001-00	Mower Nylon Deck Guard
14	4	418-0108-00	5/16 x1 Hex C/S (GR8) ZC/Yel
15	1	490-0062-03	2020 61" RZ Deck Assembly
16	1	414-0021-00	Left Pulley Cover 61" RZ/RT/SRT, 72" RT/SRT
17	1	414-0020-00	Right Pulley Cover 61" RZ/RT/SRT, 72" RT/SRT
18	4	445-0005-00	5/16-18 5-LOBE (STAR) FEMALE SOFT TOUCH KNOB (1.90 DIA) BLK
19	2	490-0047-03	2019 all RZ Deck Stabilizer assembly
20	4	732-2001-00	Large MTV A-Arm Bushing Sleeve
21	3	419-0001-00	1/2" X 1-5/8 BELLEVILLE CUP WASHER ZINC YELLOW
22	3	418-0262-00	5/16-18 X 3/4 IND HWH UNSLOT (F) TCS ZC/Y

61" Deck Assembly 2

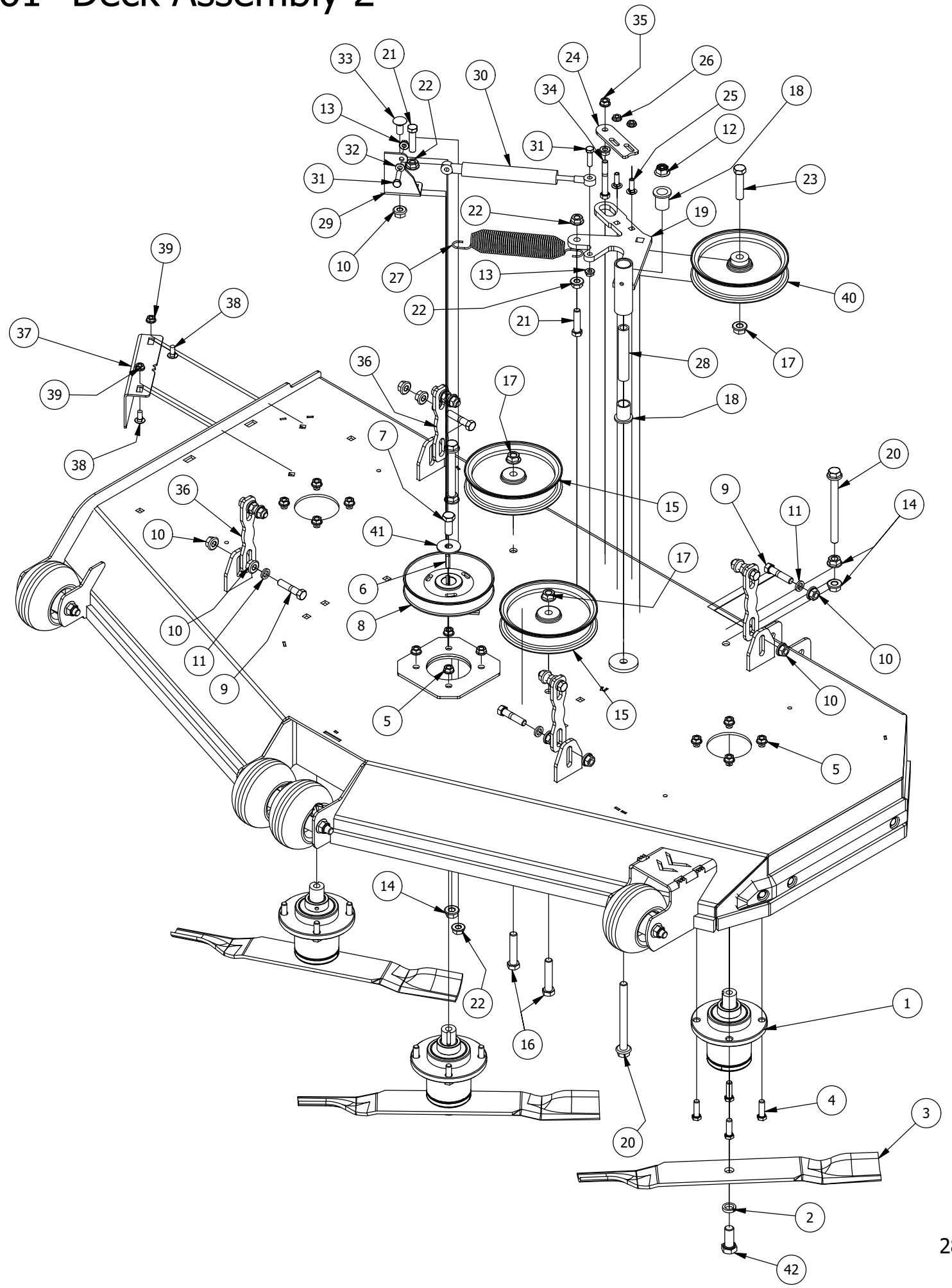

RZ 61 Deck Assembly 2			
ITEM	QTY	PART NUMBER	DESCRIPTION
1	3	437-0006-00	RZ Mower Deck Spindle Assy
2	3	419-0004-00	5/8 SPLIT LOCKWASHER ZINC
3	3	438-0002-00	61" Mower Deck Blade
4	12	418-0005-00	3/8-16 x 1-1/4 Hex Bolt GR5
5	12	413-0004-00	3/8-16 HEX FLANGE NUT W/SERR ZINC
6	3	442-0001-00	1/4 X 1 SQUARE KEY STOCK
7	3	418-0006-00	1/2-20 X 1-1/4 HEX C/S GR 5 ZINC
8	3	433-0003-00	Deck Pulley 61"
9	8	418-0046-00	7/16-14 X 2 HEX C/S GR 5 ZINC YELLOW
10	17	413-0011-00	7/16-14 HEX FLANGE NUT W/SERR ZINC YELLOW
11	8	419-0010-00	.443 ID X .750 OD X .125 THK NYLON BLACK
12	8	413-0002-00	1/2-13 NYLON INSERT FLANGE NUT ZINC YELLOW
13	2	413-0027-00	5/16-18 NYLON INSERT FLANGE LOCKNUT ZC YELLOW
14	4	413-0005-00	1/2-13 HEX FLANGE NUT W/SERR ZINC YELLOW
15	2	433-0015-00	6-3/4” Idler Pulley, 15/16” Spacer Assembly
16	2	418-0014-00	1/2-13 X 2-1/2 HEX FLANGE BOLT GR 8 ZC YELLOW
17	3	413-0010-00	1/2-13 HEX FLANGE NUT W/SERR ZINC
18	2	410-0007-00	3/4" ID X 15/16" OD X 1-1/8" LENGTH FLANGE BUSHING
19	1	490-0019-03	Mower Deck Idler Pulley Arm Assembly
20	3	418-0009-00	1/2-13 X 5-1/2 HEX FLANGE BOLT GR 8 ZY
21	2	418-0011-00	7/16-14X 1-3/4 HEX C/S GR5 ZINC Yellow
22	4	413-0001-00	7/16-14 HEX FLANGE NUT W/SERR ZINC
23	1	418-0012-00	1/2-13 X 2-1/4 HEX C/S GR 5 ZINC
24	1	439-0257-03	Deck Idler Pulley Belt Retainer Brkt
25	2	418-0010-00	5/16-18 X 1 CARRIAGE BOLT ZC/YEL
26	2	413-0006-00	5/16-18 HEX FLANGE NUT W/SERR ZINC
27	1	434-0007-00	2019 Mower Deck Spring
28	1	425-0006-00	Mower Inner Idler Spacer
29	1	439-0335-03	Deck Belt Idler Damper Mounting Bracket
30	1	434-0009-00	Idler Gas Spring
31	2	418-0109-00	5/16- 18 x 1 1/4 Hex C/S (GR.8) ZC/Yel
32	1	413-0016-00	.312 ID X .625 OD X .062 THK THRUST BEARING OIL-IMPREG BRNZ
33	1	418-0017-00	7/16-14 X 1 CARRIAGE BOLT ZINC
34	1	618-2078-00	3/8-16 x 2-3/4 Hex C/S GR2 Zinc
35	2	413-0020-00	3/8-16 HEX FLANGE NUT W/SERR ZINC YELLOW
36	4	435-0013-03	RZ Mower Deck Actuator Connecting Link
37	1	439-0398-03	2020 RT&SRT/RZ 61 Deck wiper Brkt
38	2	418-0008-00	5/16-18 X 3/4 CARRIAGE BOLT ZINC
39	2	413-0022-00	5/16-18 HEX FLANGE NUT W/SERR ZINC YELLOW
40	1	433-0014-00	6-3/4” Idler Pulley, 7/16” Spacer Assembly
41	3	419-0001-00	1/2" X 1-5/8 BELLEVILLE CUP WASHER ZINC YELLOW
42	3	418-0078-00	5/8-11 X 1-1/2 HEX C/S GR 8 ZC YELLOW

Deck Chute Asembly

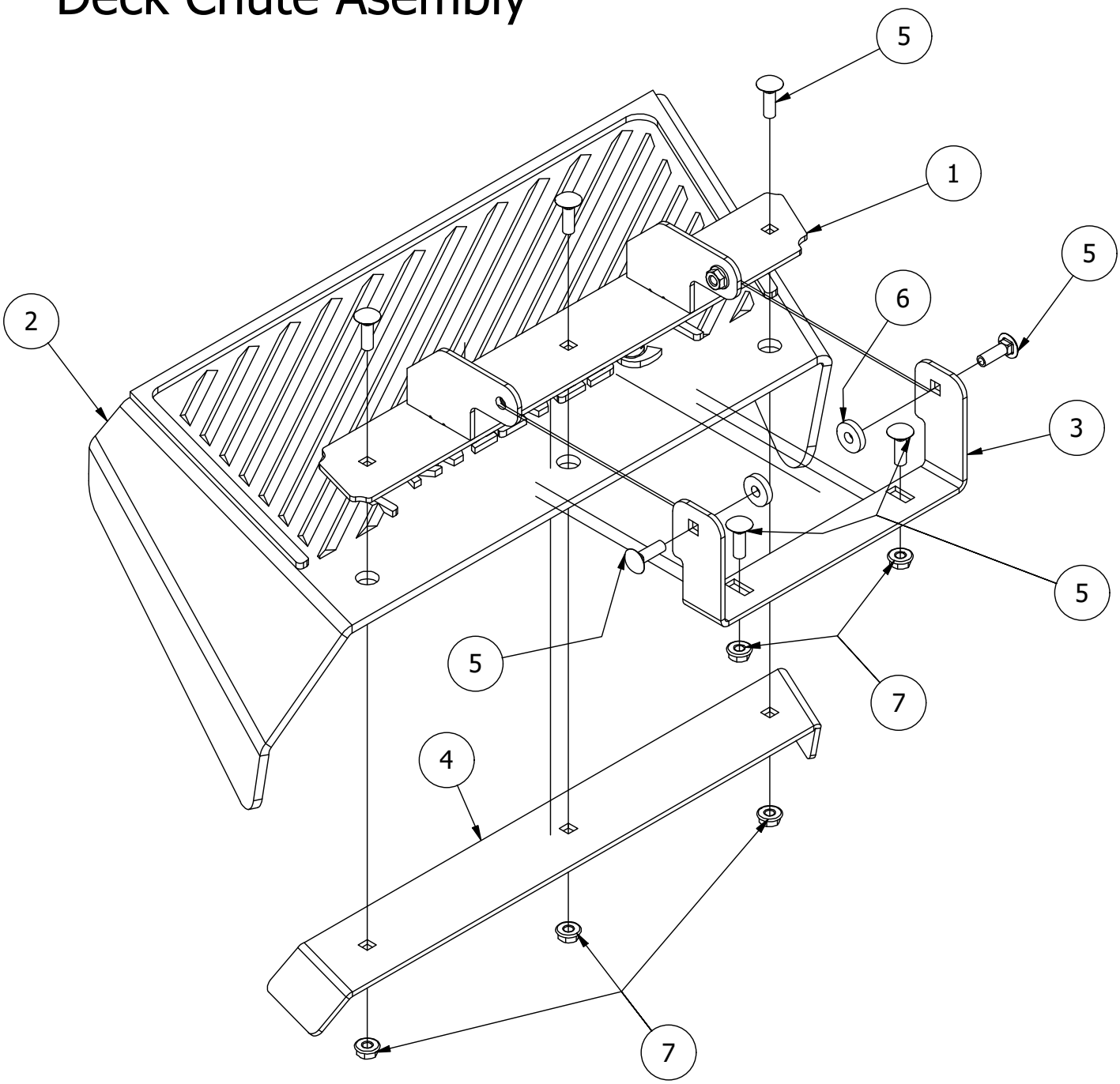

PARTS LIST			
ITEM	QTY	PART NUMBER	DESCRIPTION
1	1	490-0070-02	2020 RZ Mower Deck Chute Hinge Assembly
2	1	481-0010-00	RZ Mower Rubber Discharge Chute
3	1	439-0111-00	Mower Chute Mounting Bracket
4	1	439-0431-00	2020 RZ Mower Deck Chute Hinge Backer Bracket
5	7	418-0060-00	5/16-18 X 1 CARRIAGE BOLT ZINC YELLOW
6	2	419-0006-00	.312 ID X .875 OD X .1875 THK F/W NYLON BLK
7	7	413-0027-00	5/16-18 NYLON INSERT FLANGE LOCKNUT ZC YELLOW

Parts List			
ITEM	QTY	PART NUMBER	DESCRIPTION
1	1	437-0020-00	RZ Mower Spindle Housing
2	1	437-0021-00	RZ Mower Deck Spindle Set Colar
3	1	437-0023-00	RZ Mower Deck Spindle Shaft
4	1	437-0022-00	RZ Deck Spindle Spacer
5	2	410-0003-00	Spindle Bearing
6	1	437-0014-00	Mower Deck Spindle Dust Cup

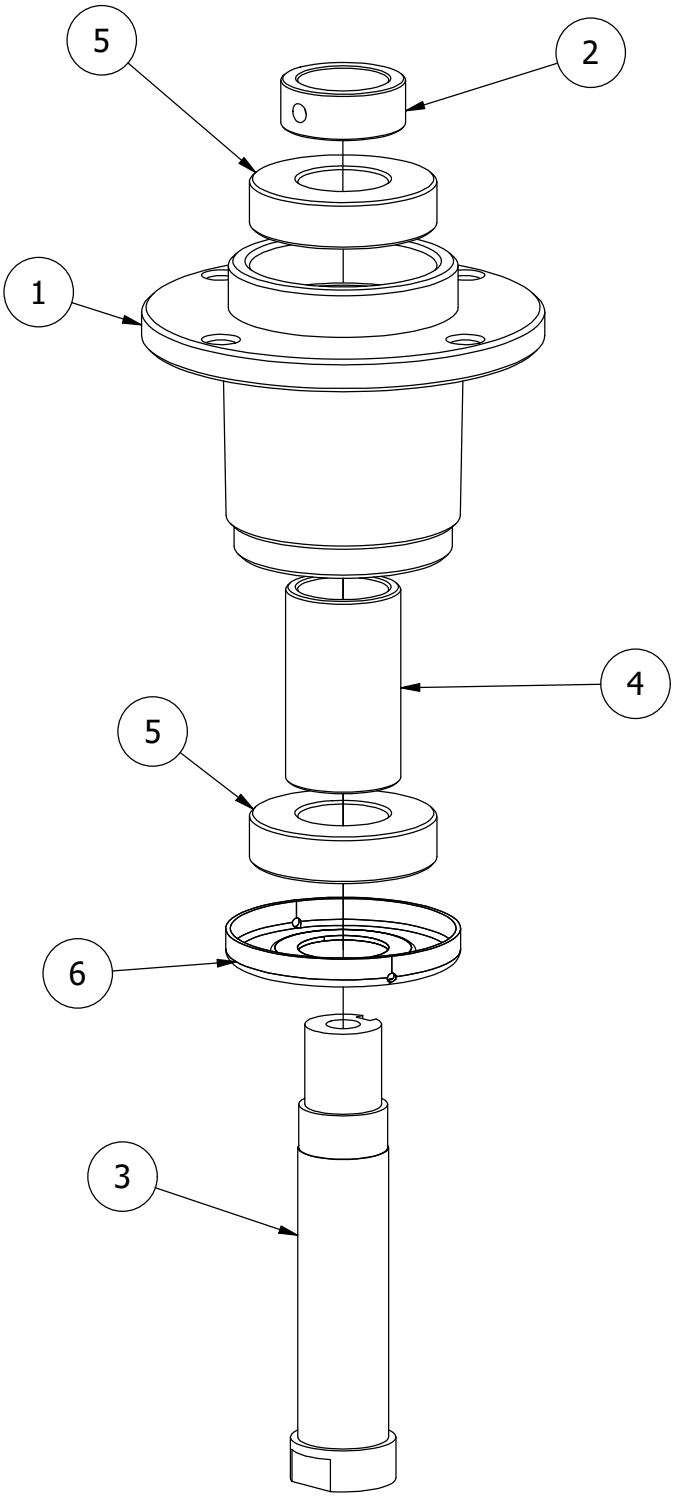

Kawasaki FR691 Engine

Kawasaki FR691 Engine Assembly			
ITEM	QTY	PART NUMBER	DESCRIPTION
1	4	418-0023-00	3/8-16 X 1-1/8 IND HWH W/SERR TRI LOB ZY
2	1	415-0074-00	2019 Exhaust System for Kawasaki FR, FS and FT
3	1	415-0021-00	Kawasaki FR691V Engine

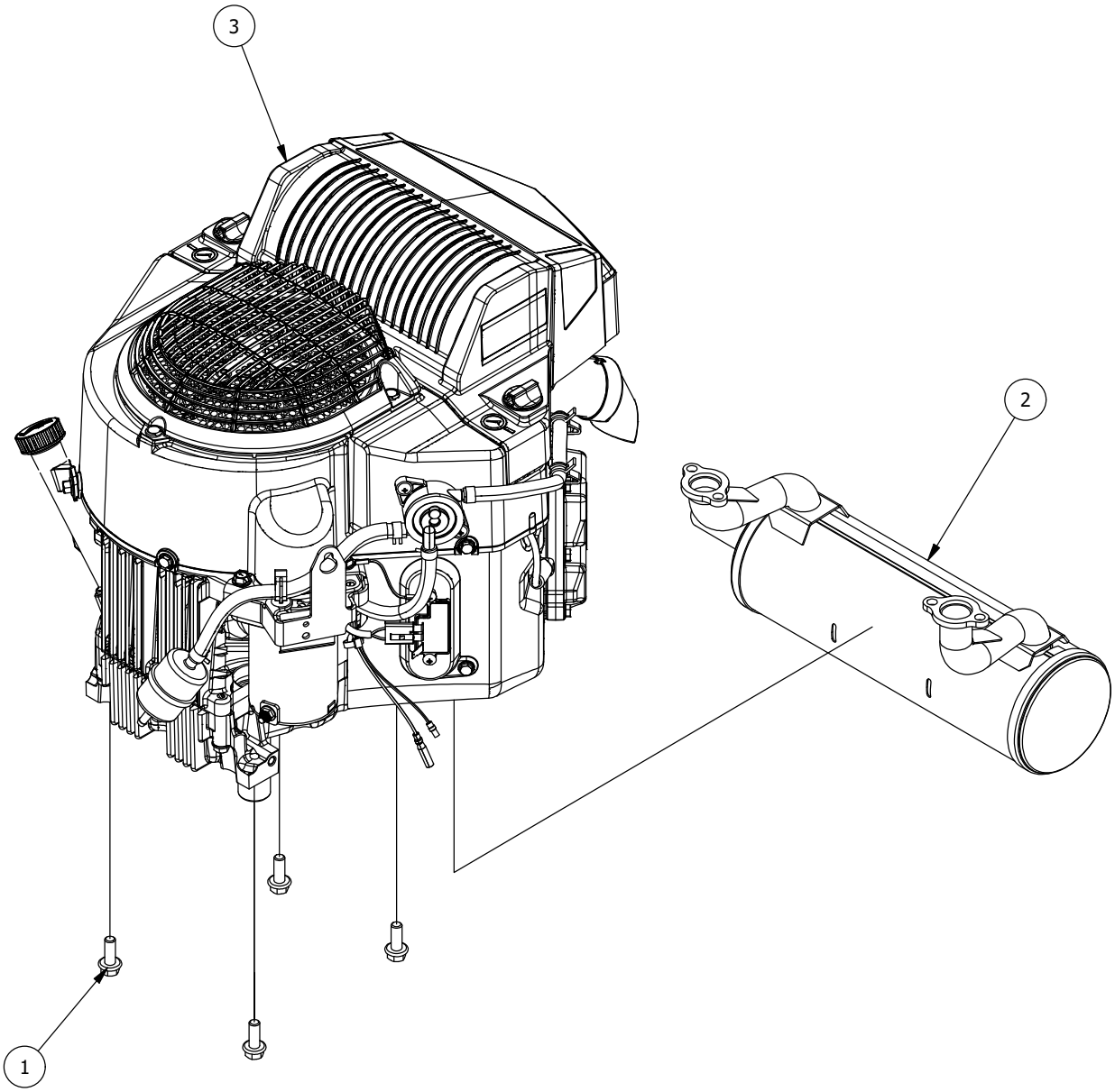

B&S 25 HP			
ITEM	QTY	PART NUMBER	DESCRIPTION
1	4	418-0023-00	3/8-16 X 1-1/8 IND HWH W/SERR TRI LOB ZY
2	1	415-0052-00	B&S 27 HP&25HP Exhaust
3	1	415-0006-00	25HP Briggs for RZ

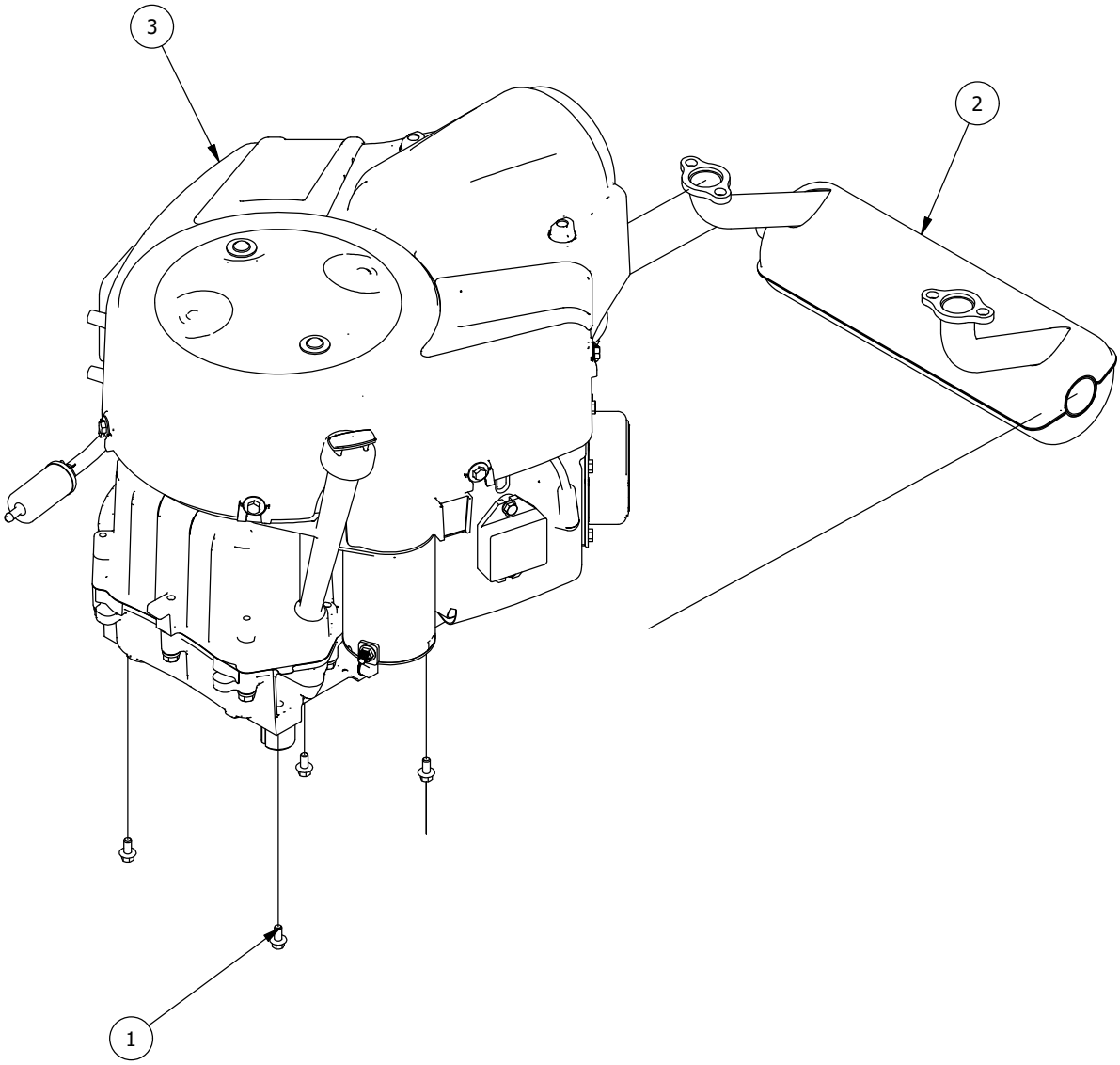

Kawasaki FT730 Engine

Kawasaki FT730 Engine assembly			
ITEM	QTY	PART NUMBER	DESCRIPTION
1	4	418-0023-00	3/8-16 X 1-1/8 IND HWH W/SERR TRI LOB ZY
2	1	415-0074-00	2019 Exhaust System for Kawasaki FR, FS and FT
3	1	415-0003-00	Kawasaki FR730V-AS27-R Engine

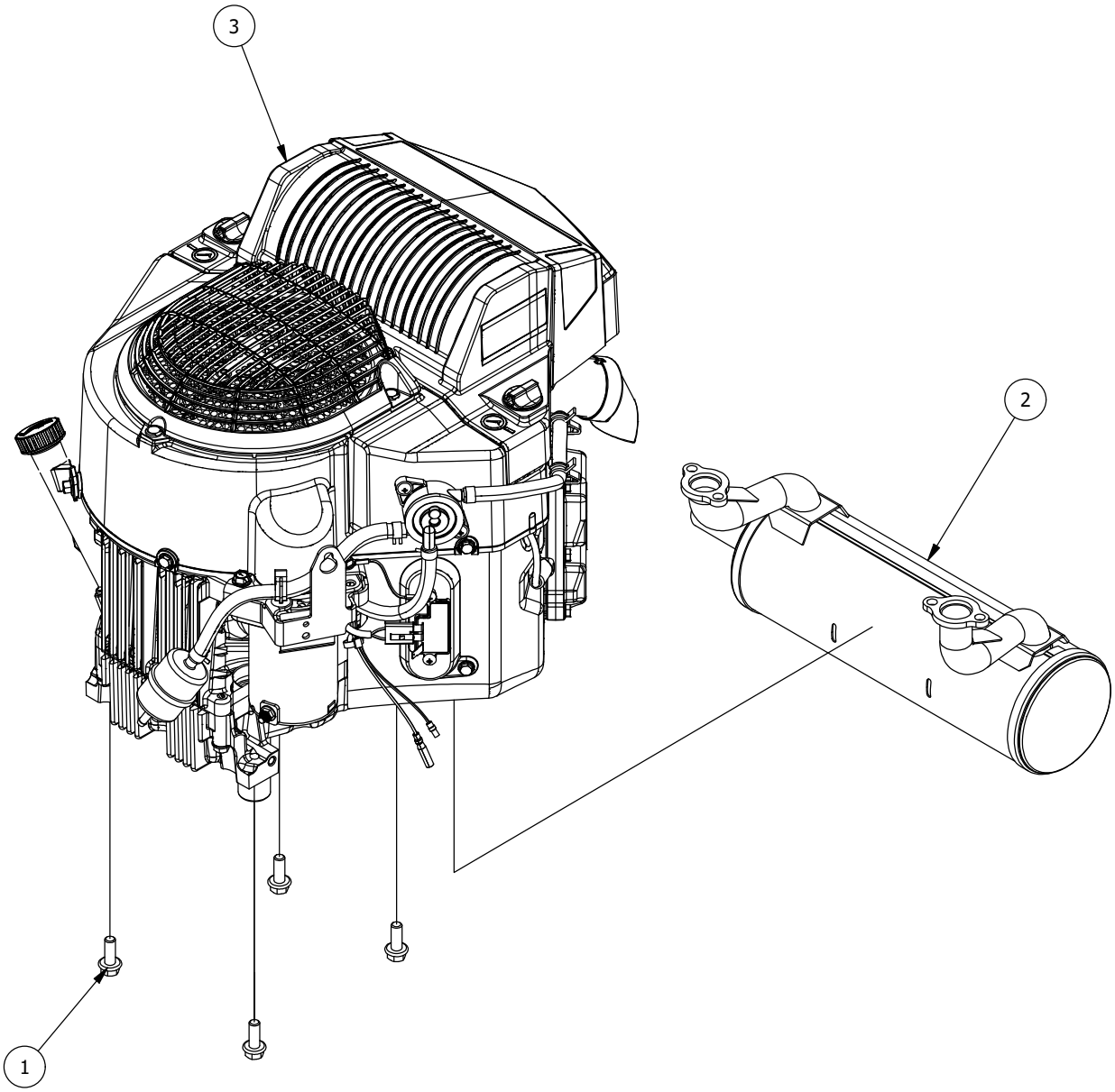

491-0001-00
Spartan Logo/Warning Label Cluster

491-0037-00
Spartan Front Decal

491-0129-00
48" Deck Decal

491-0130-00
54" Deck Decal

491-0131-00
61" Deck Decal

491-0033-00
Spartan Drive Arm

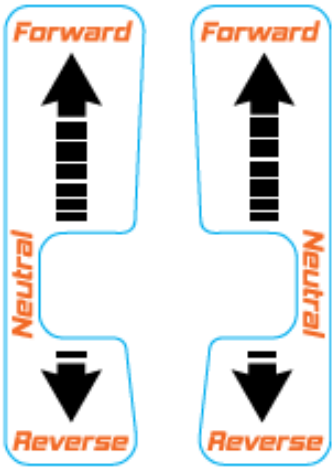

491-0082-00
Mower TTQ Deck Belt and Pump Routing Decal

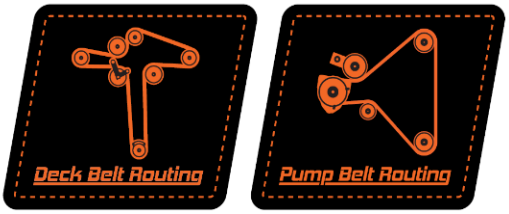

491-0168-00
RZ Model Decal

491-0190-00
Mower EPA Compliance Label

491-0002-00
Spartan Step Decal

491-0154-00
RZ Control Console Decal

491-0094-00
Spartan Carbureted Console Decal

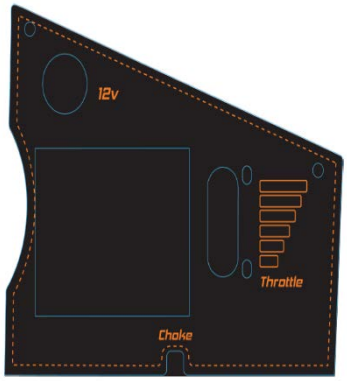

491-0152-00 & 491-0153-00
Fuel Tank Decals