Intimidator UTV Part Manual

“Kohler Diesel Truck Series”

www.IntimidatorUTV.com

Revision Date 1-1-17

Table of Contents

Front Suspension Assembly 3

Parts List 4

Lights and Break Assemblies 5

Parts List 6

Dash and Grill Assemblies 7

Parts List 8

Plastic Assembly 9

Parts List 10

CVT and Radiator Assembly.....11

Parts List.....12

Engine Assembly Only 13

Engine Assembly in Frame 14

Parts List 15

Rear Suspension Assembly 16

Parts List 17

Roll Cage Assembly 18

Safety Net Assemblies 19

Bed Assembly 20

Parts List 21

Decals 22-23

Front Suspension Assembly

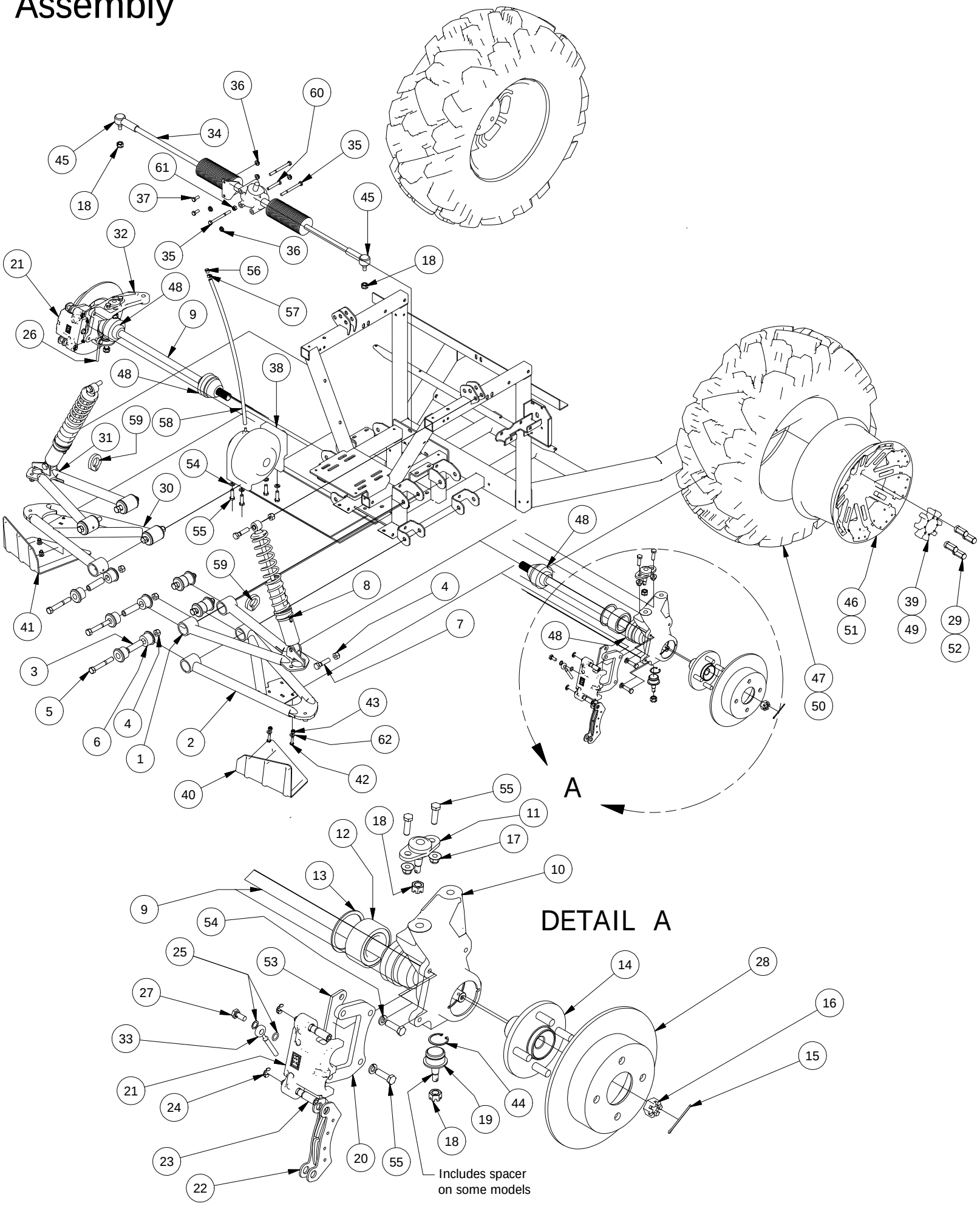

Parts List			
ITEM	QTY	PART NUMBER	DESCRIPTION
1	1	787-3201-00	Left Front Upper A-arm Assy
2	1	787-3203-00	Left Front Lower A-Arm Assy
3	8	732-2001-00	Large MTV A-Arm Bushing Sleeve
4	12	613-6037-00	1/2-13 Nylon Insert Locknut
5	8	618-2006-00	1/2" - 13X3-1/2" Hex Bolt Gr 5
6	16	732-2000-00	Large MTV A-Arm Bushing
7	4	618-5049-00	1/2-13 x 2 GR5 Hex Bolt Zinc
8	2	787-2005-00	Front Shock-Kohler 25 Lg UTV
9	2	737-2029-00	Half-Shaft - Front Large UTV
10	1	737-2020-00	Spindle, Left Front-Large UTV
11	2	799-2003-00	Ball Joint-Spindle-Upper High Strength
12	2	710-2002-00	Spindle Bearing LRG UTV
13	2	710-2003-00	Retaining Ring-Spindle Bearing
14	2	786-2000-00	Hub-Large UTV
15	2	765-1016-00	Rear Hub Castle Nut Cotter Pin
16	2	765-1012-00	Rear Hub Castle Nut
17	4	613-5202-00	3/8-16 Nylock Flange Nut
18	6	613-2003-00	M12 X 1.25 Castle Nut
19	2	799-2000-00	Ball Joint-Spindle-Lower
20	2	739-2050-60	Brake Caliper Brkt-Adrenalin
21	2	716-2005-00	Brake Caliper Assy-Large UTV
22	4	716-2006-00	Brake Pad
23	2	716-2007-00	Brake Caliper Slide Pin
24	2	716-2008-00	Caliper Assy Snap Ring-Adrenalin
25	4	616-1025-00	10 mm copper crush washer
26	1	716-3000-00	Brake Line Front Left-Lg UTV
27	2	616-1015-00	Banjo Bolt M 10mm x 1.0
28	2	716-2000-00	Rotor - Large UTV
29	8	613-0001-00	1/2 Lug Nut-44011- Front
30	1	787-3202-00	Right Front Lower A-Arm Assy
31	1	787-3200-00	Right Front Upper A-Arm Assy
32	1	737-2022-00	Spindle, Right Front-Large UTV
33	1	716-3002-00	Brake Line Front Right-Lg UTV
34	1	731-3000-00	Rack & Pinion, Large MTV
35	3	618-2060-00	5/16-18 X 3 1/2 GR 5 Hex Bolts Zinc
36	5	613-9002-00	5/16-18 Hex Flange Nuts Zinc w/Serations
37	2	618-8063-00	5/16-18 x 3/4 GR 5 Hex bolt Zinc
38	1	756-3000-00	Front Differential-Larg UTV
39	2	722-4004-00	XD4 Wheel Center Cap
40	1	780-2206-00	Left A Frame Guard-2500
41	1	780-2207-00	Right A Frame Guard-2500
42	4	618-4007-00	1/4-20 x 1 Grade 5 Hex bolts Zinc
43	4	613-8073-50	1/4-20 Nylon Insert Locknut BL
44	2	799-2001-00	Retaining Ring-Lg MTV Ball Jt
45	2	710-1014-00	Tire Rod End-Intimidator
46	2	722-4000-00	XD4 Front Wheel
47	2	722-4106-00	XD4 Front Tire
48	4	712-3222-00	Half Shaft CV Boot Kit
49	2	722-4110-00	Base Wheel Center Cap
50	2	722-4112-00	Base Model Front Tire
51	2	722-4006-00	Base Model Front Wheel
52	8	713-1012-50	Open End Lug Nut-Black (Base Model Only)
53	2	725-3210-60	Caliper Brake Mount Spacer
54	8	619-5037-00	3/8 Lockwasher Zinc
55	12	618-5040-00	3/8-16 x 1-1/4 Hex Bolt GR5
56	1	724-1045-00	Breather Plug Threaded
57	1	772-1001-00	5/16 Spring Hose Clamp
58	1	751-1018-00	5/16 ID 7/16 OD Hose
59	2	772-2050-00	Break Line Anchor-1-1/4"
60	1	618-2071-00	5/16-18X 2" Hex Head Cap Screw
61	1	613-8047-00	5/16-18 Nylock HEX Nut
62	4	619-0010-50	1/4 Flat Washer Black

Lights and Brake Assemblies

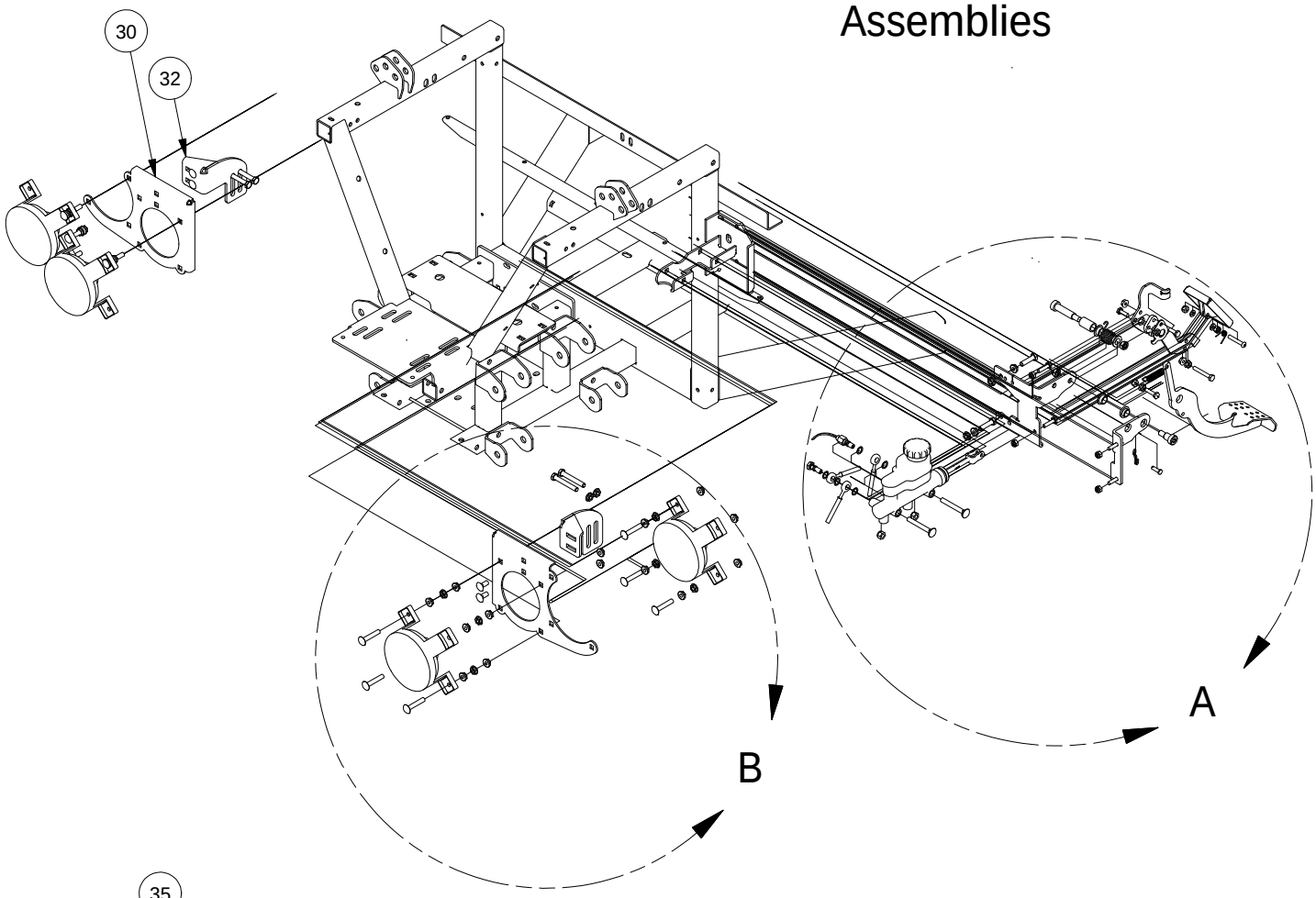

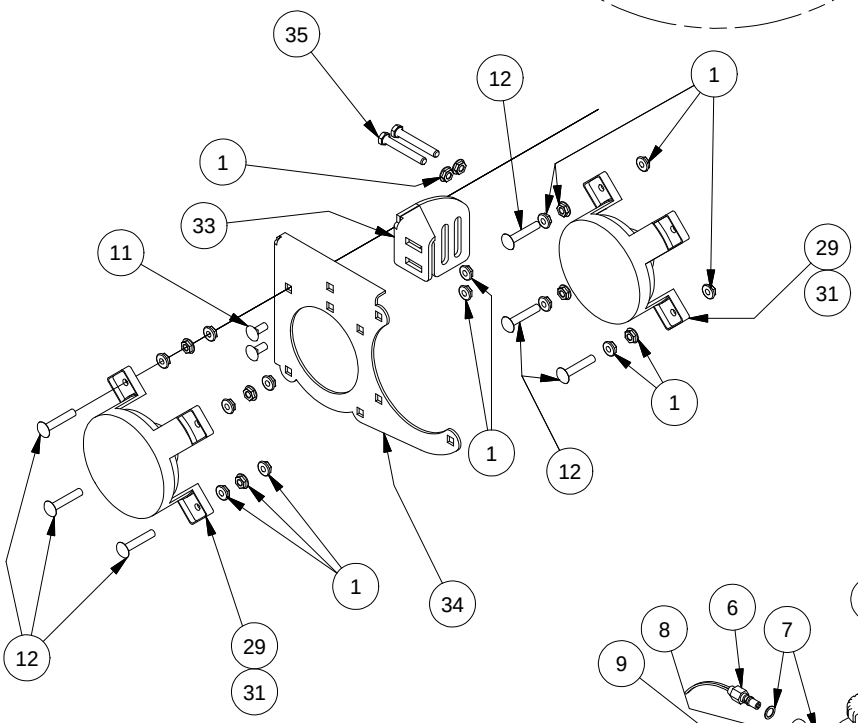

DETAIL B

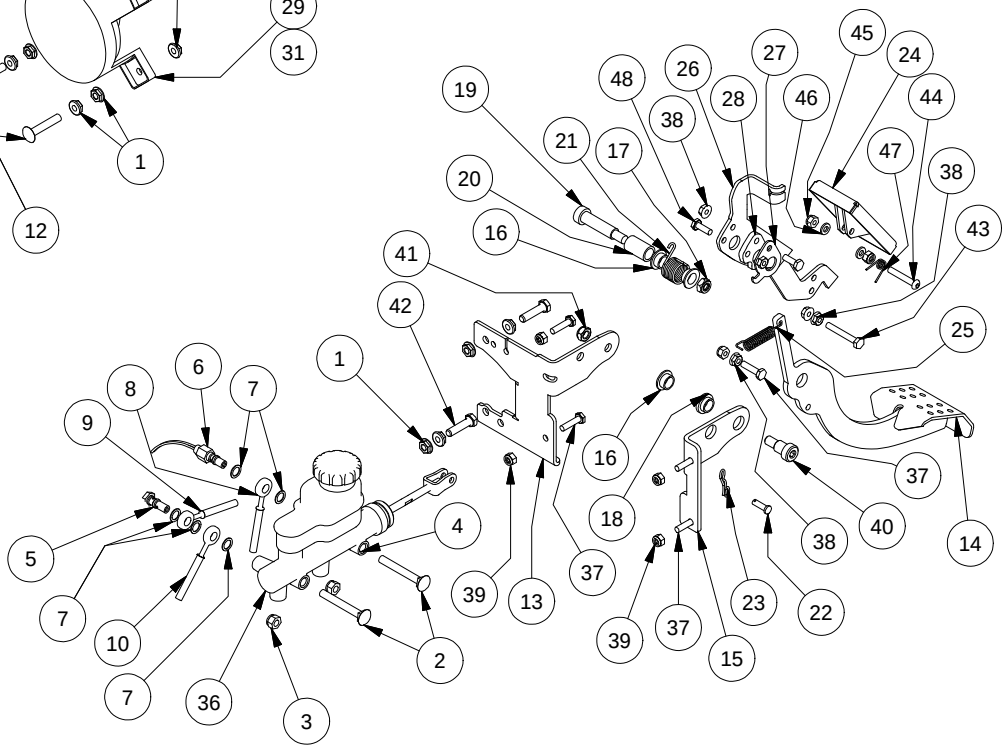

DETAIL A

Parts List			
ITEM	QTY	PART NUMBER	DESCRIPTION
1	48	613-9002-00	5/16-18 Hex Flange Nuts Zinc w/Serations
2	2	618-2019-00	5/16" - 18 X 2-1/2" Carriage Bolt
3	2	613-8047-00	5/16-18 Nylock HEX Nut
4	1	716-1000-00	Master Cylinder, Dual Cylinder
5	1	716-1017-00	Banjo Bolt-Double-10mm-1.0
6	1	777-1011-00	Brake Switch-Banjo-2012
7	5	616-1025-00	10 mm copper crush washer
8	1	716-3012-00	Brake Line-MC to Rear T-Lg UTV
9	1	716-3000-00	Brake Line Front Left-Lg UTV
10	1	716-3002-00	Brake Line Front Right-Lg UTV
11	4	618-8062-00	5/16-18x3/4 Carriage Bolts Zinc
12	12	618-4708-00	5/16-18 x 1-3/4 Carriage bolt
13	1	739-4202-00	Brake Pedal Bracket-Right-2500
14	1	716-2012-00	Brake Pedal Assy-Large UTV
15	1	739-4200-00	Brake Pedal Bracket Left-2500
16	3	632-5000-00	1/2 IDx 5/8 x 5/16 OIB Bushing
17	1	613-2004-00	3/8"-16 Nyloc Jam Nut
18	1	732-2003-00	Bushing, Oil Impregnated
19	1	618-6064-00	12"X1-3/4" Shoulder Bolt
20	1	725-1009-00	Pedal Spring Spacer LRG UTV 1-1/8 spacer
21	1	734-2002-00	Spring-Accelerator Pedal
22	1	620-1000-00	Clevis Pin, 1/4" x 3/4"
23	1	620-1002-00	Bow Tie Clip
24	1	755-1004-00	Accelerator Pedal Assy-LG UTV
25	1	734-2000-00	Spring-Park Brake
26	1	739-4215-00	Accel Pedal Lever
27	1	739-4216-00	Accel Pedal Spring Anchor
28	1	725-1007-00	Accel Pedal Spacer
29	4	786-0016-00	Headlight-High Beam-Large UTV
30	1	739-4054-00	Head Light Bracket-Right
31	1	788-1012-00	4717 LED Headlight
32	1	739-4058-00	Head Light Bracket Brace-Right
33	1	739-4056-00	Head Light Bracket Brace-Left
34	1	739-4052-00	Head Light Bracket-Left
35	4	618-2034-00	5/16" x 2-1/4" Hex Hd Cap Scr.
36	1	785-1020-00	Break Fluid DOT3 .3 quarts
37	5	618-4007-00	1/4-20 x 1 Grade 5 Hex bolts Zinc
38	5	613-9001-00	1/4-20 Hex Flange Nuts Zinc W/Serrations
39	5	613-8073-00	1/4-20 Nylon Insert Locknut Zinc Orange Nylon
40	1	618-6062-00	1/2" x 5/8" Soc. Shoulder Bolt
41	1	613-2004-00	3/8"-16 Nyloc Jam Nut
42	2	618-2029-00	5/16" x 1-1/4" Hex C/S Gr 5
43	1	618-2016-50	1/4-20 x 1-3/4" Hex Bolt
44	1	618-2038-50	1/4-20 X1-1/2" BH Socket Scr Blk
45	2	613-8073-50	1/4-20 Nylon Insert Locknut BL
46	2	619-4012-00	.255 ID x .500 OD x .075 Thick TFE Washer
47	1	734-2003-00	Spring-Accelerator Pedal Assy
48	2	618-8052-00	1/4-20 x 3/4 Grade 5 Hex bolts Zinc

Dash & Grill Assemblies

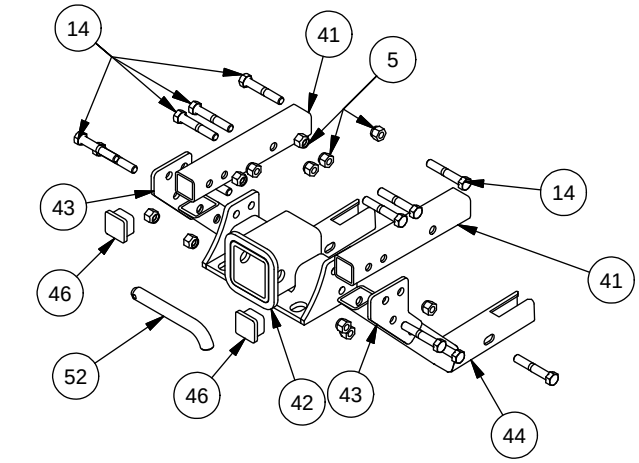

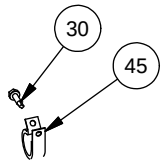

DETAIL C

DETAIL B

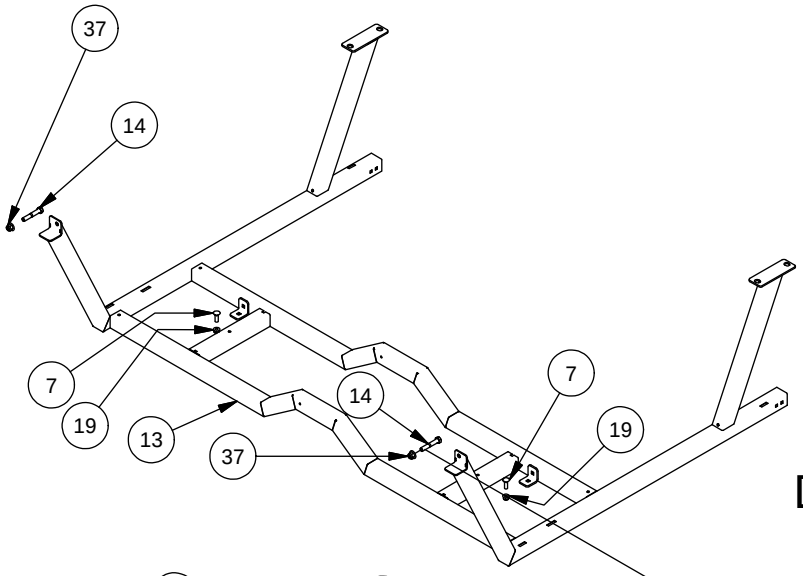

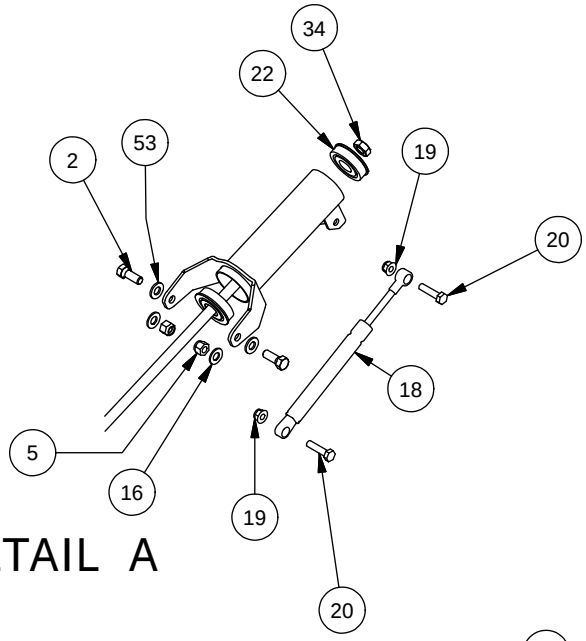

DETAIL A

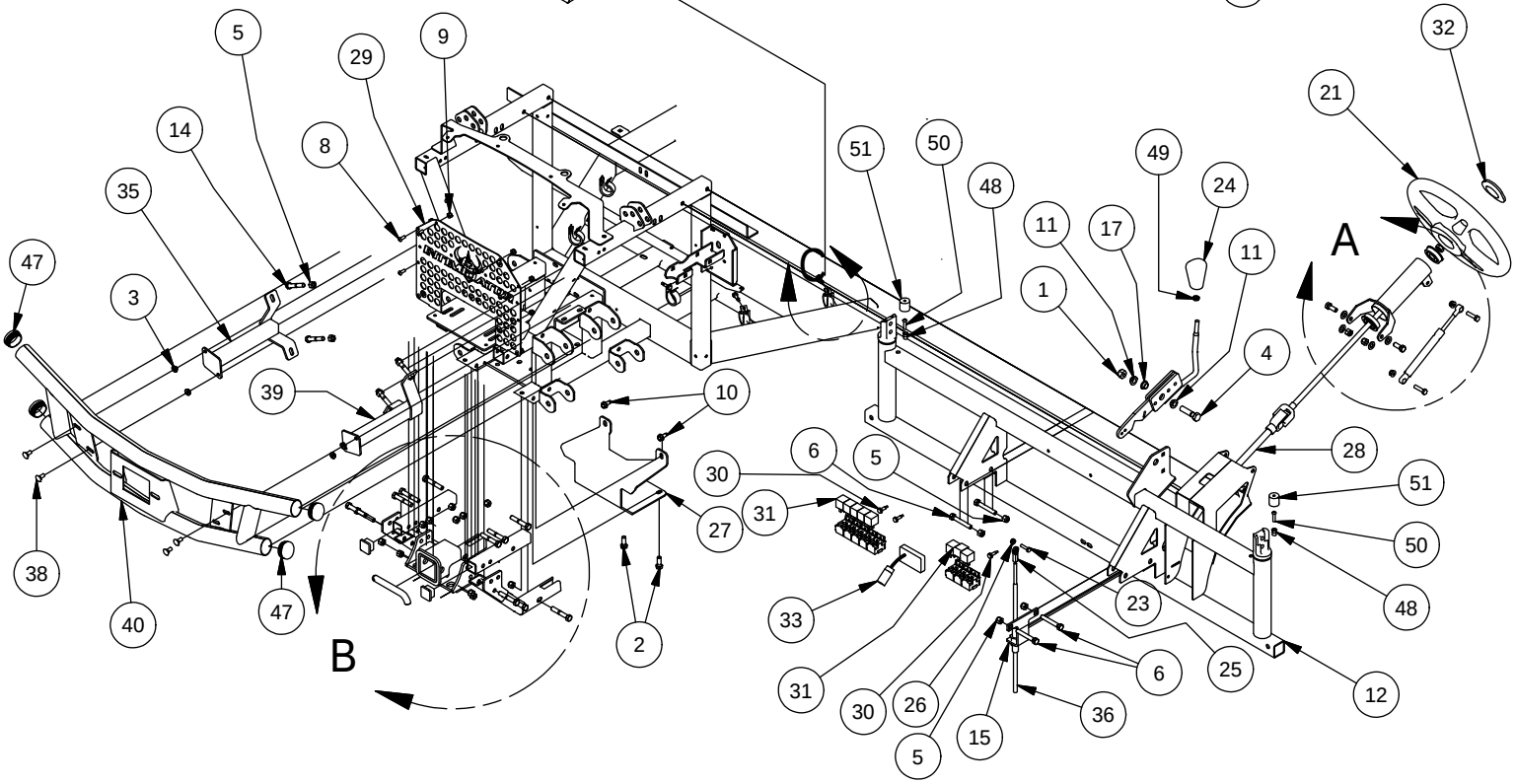

Dash & Grill Assemblies			
ITEM	QTY	PART NUMBER	DESCRIPTION
1	1	613-6037-00	1/2-13 Nylon Insert Locknut
2	4	618-6049-00	3/8-16 X 1 GR 5 Hex Bolts Zinc
3	12	613-9002-00	5/16-18 Hex Flange Nuts Zinc w/Serations
4	1	618-5049-00	1/2-13 x 2 GR5 Hex Bolt Zinc
5	26	613-5041-00	3/8-16 Nylon Insert Locknut
6	4	618-2069-00	3/8" - 16 X 2-1/2" Hex Hd Cap Screw
7	6	618-8065-00	5/16-18 x 1 Carriage Bolt
8	13	618-8064-50	1/4-20 x 5/8 Button Socket C/S
9	13	613-8073-50	1/4-20 Nylon Insert Locknut BL
10	11	618-2021-00	5/16" - 18 3/4" Ind Hex Washr Hd - Type F
11	2	732-2003-00	Bushing, Oil Impregnated
12	1	770-3002-00	Dash Support Assy.
13	1	770-3000-00	Floor Board Support Assy
14	18	618-2022-00	3/8" - 16 X 2-1/4" Hex Bolt
15	1	739-3364-60	Upper Shift Cable Bracket
16	2	619-0012-00	3/8 ID x 1/8 Plastic Washer
17	1	632-5000-00	1/2 IDx 5/8 x 5/16 OIB Bushing
18	1	735-2005-00	Tilt Steering Gas Spring
19	9	613-8049-00	5/16-18 Nylon Insert Flange Nut Zinc Orange Nylon
20	2	618-1077-00	5/16 x 1-1/4 G8 Zn Hex Bolt
21	1	722-2500-00	Steering Wheel Large UTV
22	2	720-4060-00	Steering Column Bearing
23	5	618-4007-00	1/4-20 x 1 Grade 5 Hex bolts Zinc
24	1	745-2000-00	Shift Lever Knob-Large UTV
25	1	799-1002-00	1/4-28, Right Hand Thread Heim
26	3	613-8073-00	1/4-20 Nylon Insert Locknut Zinc Orange Nylon
27	1	726-3210-00	Brush Guard Skid Plate
28	1	737-5002-00	Steering Shaft Assembly-Large UTV
29	1	726-4065-00	Front Grill Insert 2015
30	10	630-7040-00	1/4 x 1 Hex Head Tek Screw
31	8	786-0005-00	12 Volt Cube Relay
32	1	722-2502-00	Steering Wheel Cap-Hurricane
33	1	786-2002-00	PMW Controller, Team Rear Diff
34	1	737-5003-00	Steering Shaft Wheel Nut
35	1	739-3220-00	Brush Guard Mtg Brkt-Right
36	1	764-2006-00	Gear Shift Cable-2500 Ext Bed
37	2	613-5202-00	3/8-16 Nylock Flange Nut
38	12	618-8062-00	5/16-18x3/4 Carriage Bolts Zinc
39	1	739-3221-00	Brush Guard Mtg Brkt-Left
40	1	770-3325-00	Intimidator Bumper 2015
41	2	703-4400-60	Front Receiver Tube Mtg Tube
42	1	793-3210-00	Front Receiver Assembly
43	2	739-4401-60	Front Receiver Gusset Intimidator
44	2	703-4401-60	Front Receiver Bottom Tube Intimidator
45	5	672-9000-00	1/2 EPDM Cushion Clamp
46	2	714-1002-00	1-1/4"x1-1/4" Black Tube Plug
47	8	614-3410-00	1-3/4" Round Tubing Plug
48	2	619-0026-00	Rivnut 1/4-20 Steel
49	1	613-6051-00	3/8-24 Hex Nut Zinc
50	2	618-2037-50	1/4-20 X1 Button Socket C/S Black
51	2	729-1000-00	Hood Rest Bumper-Lg UTV
52	1	793-3212-00	Hitch Pin
53	2	619-0057-50	3/8 Flat Washer Black Zinc

Flat Bed Plastics Assembly

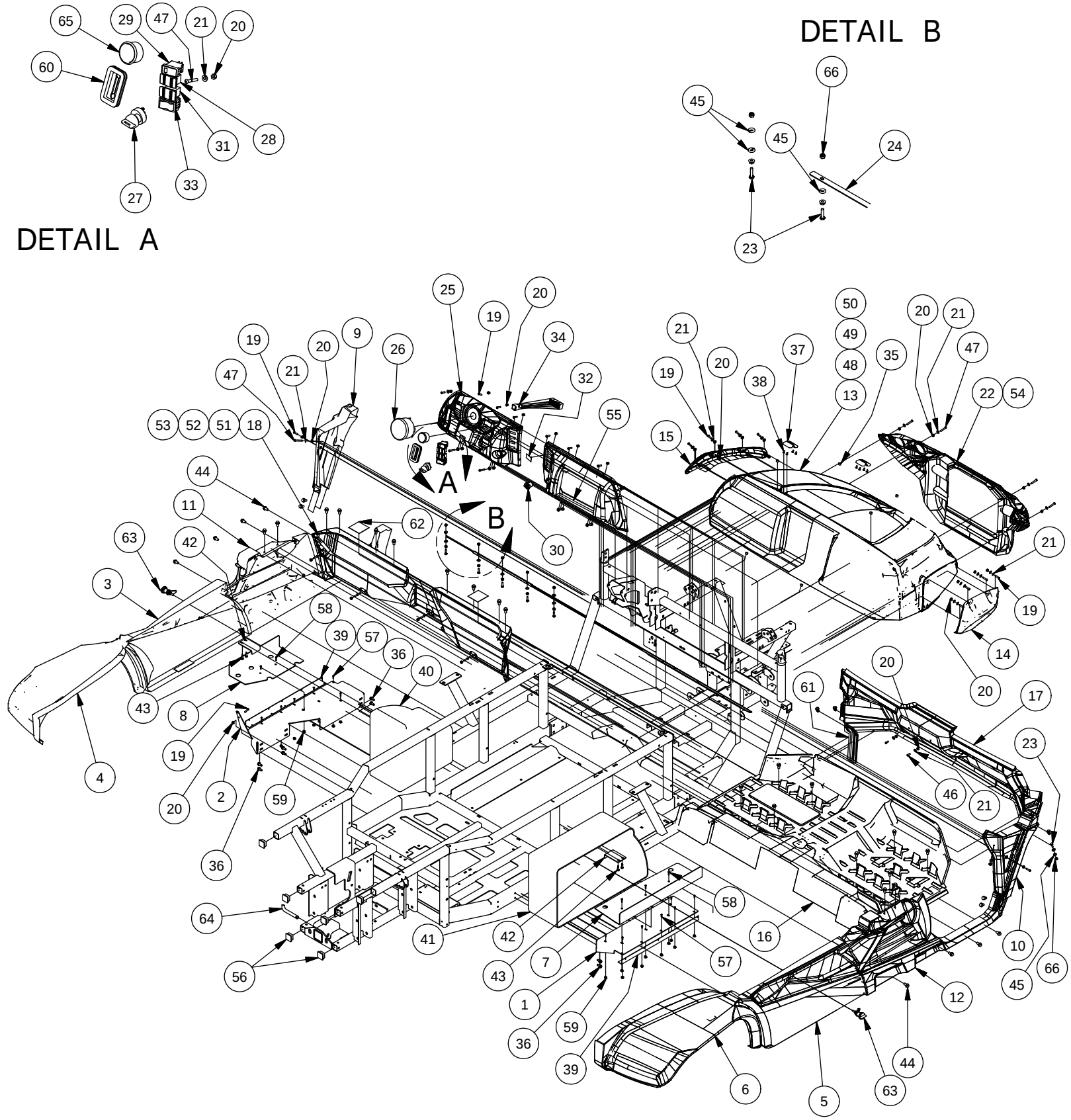

Parts List			
ITEM	QTY	PART NUMBER	DESCRIPTION
1	1	739-4503-00	Passenger Side Tool Box Shelf
2	1	739-4502-00	Driver Side Tool Box Shelf
3	1	780-2201-00	Storage Door left
4	1	780-2205-00	Left Rear Fender
5	1	780-2203-00	Storage Door Right
6	1	780-2204-00	Right Rear Fender
7	1	739-4500-00	Passenger Side Tool Box Stop
8	1	739-4501-00	Driver Side Tool Box Stop
9	1	780-2055-10	Lower Front Fender Flare-Left
10	1	780-2050-10	Lower Front Fender Flare-Right
11	1	780-2030-10	Seat Panel Left-Large UTV-Blk
12	1	780-2025-10	Seat Panel Right-Large UTV-Blk
13	1	759-2000-00	Hood Large UTV-Orange
14	1	780-2012-10	Upper Front Fender Flare-Right
15	1	780-2011-10	Upper Front Fender Flare-Left
16	1	780-2015-10	Floor Board-Large UTV-Black
17	1	780-2010-10	Front Firewall-Large UTV-Black
18	1	780-2020-00	Center Seat Panel-Large UTV-Or
19	24	618-2037-50	1/4-20 X1 Button Socket C/S Black
20	36	613-8073-50	1/4-20 Nylon Insert Locknut BL
21	30	619-0010-50	1/4 Flat Washer Black
22	1	780-2060-10	XD4 Front Grill
23	9	618-4007-00	1/4-20 x 1 Grade 5 Hex bolts Zinc
24	1	726-3242-60	Firewall Mount Brkt
25	1	780-2035-00	Dash/Glovebox Assy-Large UTV
26	1	786-2020-00	Speedometer/Display Gauge
27	1	777-1000-00	Ignition Switch
28	1	786-2034-00	Head Light Hi/off/Low Beam Sw.
29	1	786-2038-00	4WD Switch
30	1	677-2075-00	12 Volt Auxilliary Plug
31	1	786-2030-00	Differential Lock Switch
32	1	786-2040-00	Panel Plug-Eaton Blank Switch
33	1	786-2036-00	Dump Bed Up/Down Switch
34	1	786-2013-00	Wiring Harness-Diesel Truck & Crew
35	6	729-1002-00	Buttom Bumper-Tailgate-2500
36	12	618-2021-00	5/16" - 18 3/4" Ind Hex Washr Hd - Type F
37	2	653-5010-00	Hood Hinge
38	8	630-2050-00	M5-.8 x 10 Pan Phil M/S Zinc
39	2	752-1016-00	Truck Bed Tool box Hinge
40	1	780-2200-00	Driver Storage Box
41	1	780-2202-00	Passenger Storage Box
42	2	726-4085-00	Tool Box Striker Plate
43	4	630-7040-00	1/4 x 1 Hex Head Tek Screw
44	32	618-6065-00	AUEVCO P/N 17216 HOLE PLUG BLACK
45	15	619-0023-00	5/16 flat Washer 18-8 SS
46	4	618-8064-50	1/4-20 x 5/8 Button Socket C/S
47	10	618-2038-50	1/4-20 X1-1/2" BH Socket Scr Blk
48	1	759-2000-20	Hood-OD Green
49	1	759-2000-80	Hood-Camo
50	1	759-2000-40	Hood-Matallic Black
51	1	780-2020-20	Center Seat Panel-Large UTV-Gr
52	1	780-2020-80	Center Seat Panel-2500-Camo
53	1	780-2020-40	Center Seat Panel-2500-Charco
54	1	780-2061-10	Base Model Front Grill
55	1	780-2040-00	Glovebox
56	6	714-1004-00	1-1/4"x1-1/4" Black Tube Plug
57	12	618-8056-00	10-24 x 1/2 Button Socket C/S 18-8 SS
58	6	618-8057-00	10-24 x 3/4 Button Socket C/S 18-8 SS
59	18	613-5019-00	10-24 Nylon Insert Locknut
60	1	736-2000-00	Shift Lever Boot-Large UTV
61	1	736-2002-00	Break Pedal Boot-Lg UTV
62	2	729-1006-00	Seat Pin Frame Guard-3x3.125"
63	2	752-1014-00	Latch Compression Hinge
64	1	793-3212-00	Hitch Pin
65	1	786-2024-00	Indicator Light
66	9	613-8073-00	1/4-20 Nylon Insert Locknut Zinc Orange Nylon

CVT and Radiator Assemblies

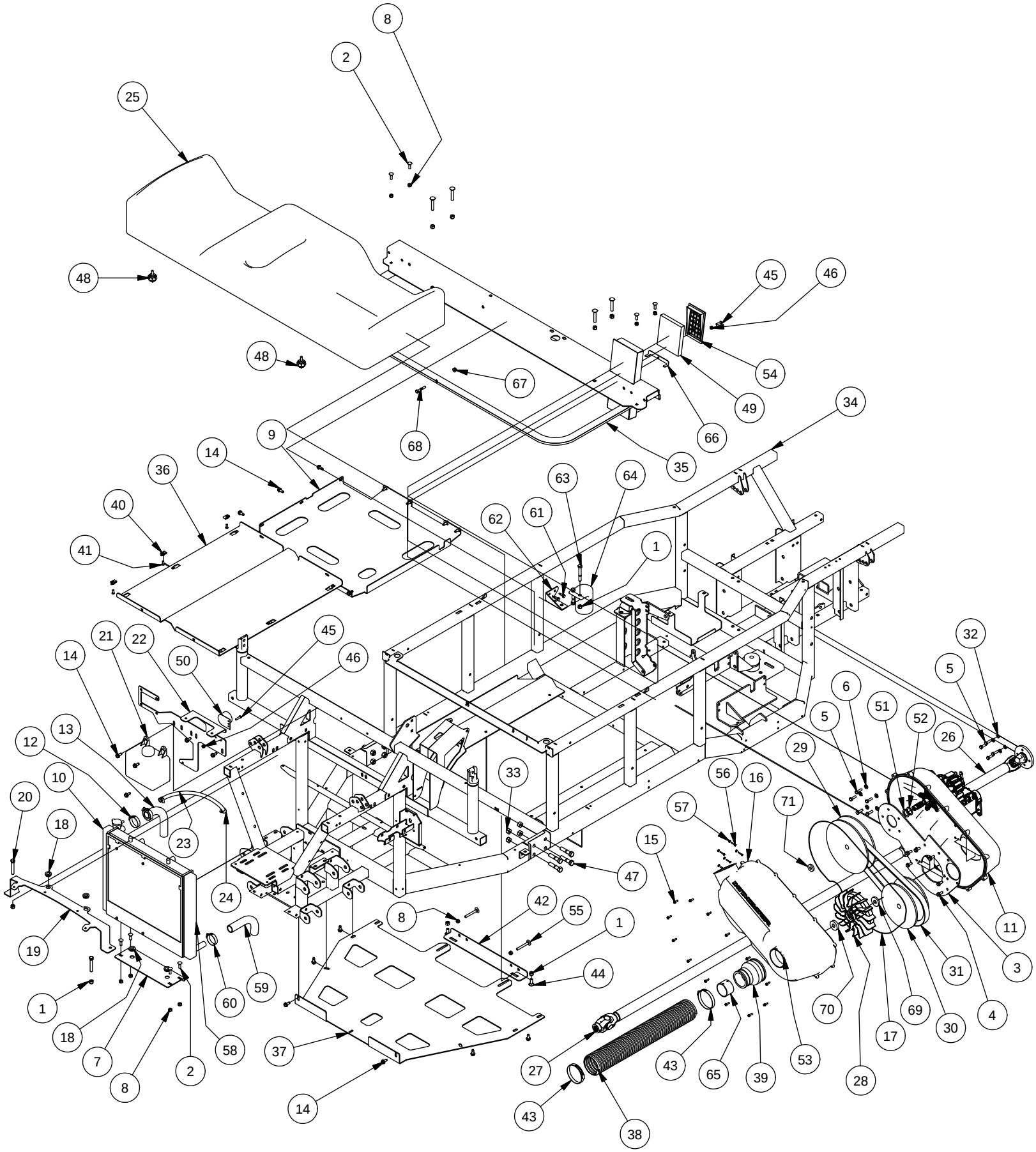

Parts List			
ITEM	QTY	PART NUMBER	DESCRIPTION
1	10	613-5041-00	3/8-16 Nylon Insert Locknut
2	8	618-8065-00	5/16-18 x 1 Carriage Bolt
3	1	726-3240-00	Diesel/CVT Plate
4	6	618-6073-00	M8x1.25x20mm Hex Washer Hd MS
5	9	618-1080-00	5/16-18 x 1" GR 8 Hex bolt
6	5	619-0013-00	3/8" Zn Lock Washer
7	1	739-3337-00	Lower Radiator Mounting Brkt
8	10	613-8047-00	5/16-18 Nylock HEX Nut
9	1	793-1002-00	Intimidator Diesel Skid Plate
10	1	761-2000-00	RadiatorAssy-Large MTV
11	1	714-3002-00	CVT Enclosure Rear-Diesel
12	2	772-2017-00	ABA 22-32mm x12mm Wide Hose Clamp
13	2	751-3000-00	Coolant Hose 1" ID X 1.25 OD
14	21	618-2021-00	5/16" - 18 3/4" Ind Hex Washr Hd - Type F
15	13	718-3000-00	CVT Enclosure Bolt
16	1	714-3000-00	CVT Enclosure Front Cover
17	1	712-3012-00	CVT Gasket
18	4	719-5000-00	Radiator Grommets
19	1	739-3374-00	Upper Radiator Mounting Brkt
20	2	618-2069-00	3/8" - 16 X 2-1/2" Hex Hd Cap Screw
21	1	767-2006-00	Radiator Overflow Bottle-2500
22	1	739-2057-00	Upper Hood Support Brkt-Diesel-Weber
23	1	751-1013-00	1.5 ft.-5/16" Hose - High Temp
24	2	672-8067-00	Hose Clamp No. 4 - 7/32 - 5/8
25	2	771-2002-00	Seat Bottom-Large UTV
26	1	737-2026-00	Rear Drive Shaft Lg UTV-Diesel
27	1	737-2031-00	750 EFI/ Diesel Ext Bed TRK Series
28	1	770-1020-00	CVT Clutch Fan
29	1	770-1004-00	CVT Driven Pulley-Diesel
30	1	770-1002-00	CVT Driver Pulley-Diesel
31	1	741-1002-00	CVT Belt-Diesel
32	4	619-8051-00	5/16 Lockwasher Zinc
33	8	613-6037-00	1/2-13 Nylon Insert Locknut
34	1	770-3013-00	Frame Assy-Truck Series-Diesel
35	1	770-3305-00	Seat Frame Assembly Diesel Truck
36	1	726-4014-00	Truck Series Skid Plate
37	1	726-4012-00	Skid Plate - Kohler 750 EFI & DIESEL
38	1	751-1010-00	1.5 ft.-3" Flex Hose
39	1	751-3008-00	3" X 2" Hose Reducer
40	6	613-0054-00	1/4-20 Cage Nut
41	6	618-8064-00	1/4-20 x 5/8 Buttonhead Socket C/S 18-8 SS
42	1	739-3902-00	Truck Series Skid Plate Front Brkt
43	2	772-2015-00	CVT Enclosure Hose Clamp
44	2	618-2011-00	3/8 - 16 X 1" Carriage Bolt
45	3	618-2037-50	1/4-20 X1 Button Socket C/S Black
46	3	613-8073-50	1/4-20 Nylon Insert Locknut BL
47	8	618-6066-00	1/2"-13x2-1/4 Gr8 Hex Cap Scr
48	2	739-2300-00	Seat Pin Latch Assembly
49	2	763-2100-00	CVT Plenum Filter Media
50	1	786-2060-00	Piezeoelectric Buzzer
51	1	725-1001-00	.12 CVT Shim
52	1	725-1002-00	.08 CVT Shim
53	1	619-0061-00	.406" ID x .834" Nord-Loack Washer, CVT Clutch
54	2	780-2100-00	CVT Plenum Bezel
55	2	618-4709-00	5/16-18 x 2 3/4 Carriage Bolts
56	5	618-2114-00	6/32 x 3/4 Pan Head Hex Head Machine Screw
57	5	613-0006-00	6-32 Hex Nut
58	1	785-1000-00	Antifreeze-Premix 1.5 gallons
59	1	751-3007-00	Coolant Hose, Drivers side, Crew/Truck Series
60	1	772-2018-00	ABA 32-44mm x x12mm Wide Hose Clamp
61	7	630-7040-00	1/4 x 1 Hex Head Tek Screw
62	1	739-2303-00	Diesel Remote Oil Filter Bracket
63	2	618-2078-00	3/8-16 x 2-3/4 Hex C/S GR2 Zinc
64	1	ED161434-s	Remote Oil Filter Kit
65	1	703-3390-00	CVT Crush Tube
66	2	739-3420-00	CVT Enclosure Bracket
67	1	613-8049-00	5/16-18 Nylon Insert Flange Nut Zinc Orange Nylon
68	1	618-8059-00	5/16-18 x 1-3/4 Grade 5 Hex Bolt
69	1	770-1022-00	CVT Fan Inside Spacer Washer
70	1	770-1023-00	CVT Centrifugal Fan Spacer Washer
71	1	770-1024-00	CVT Secondary Spacer Washer

Kohler Diesel Engine

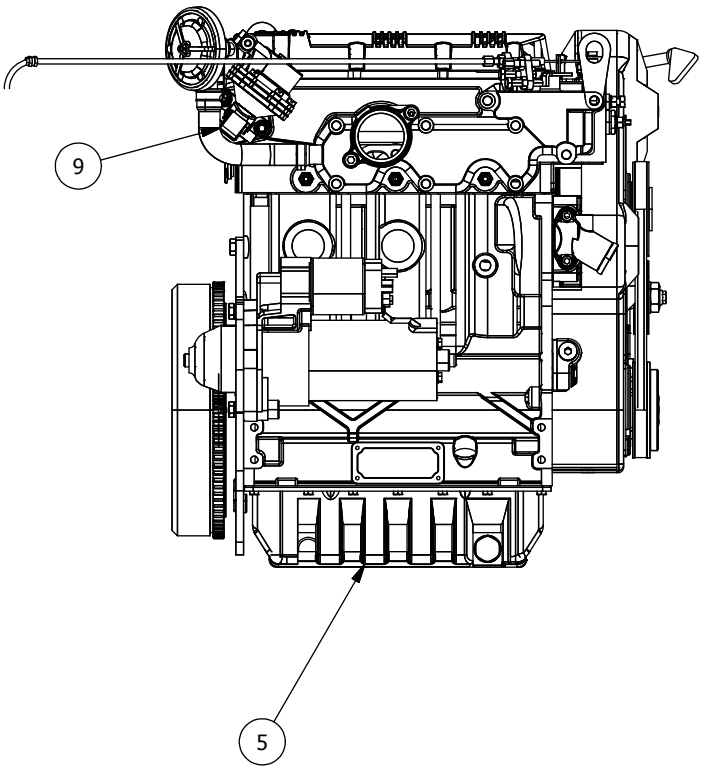

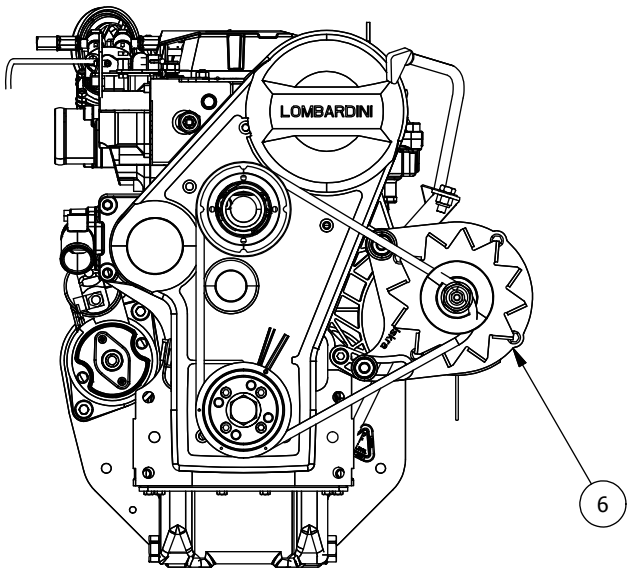

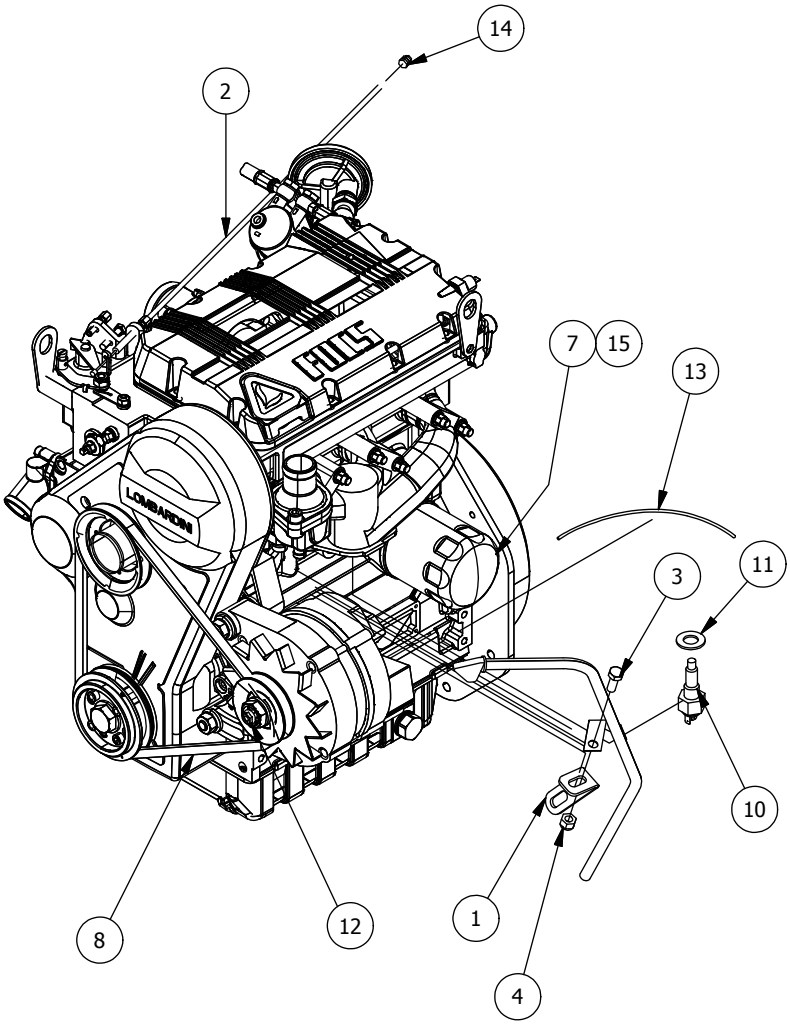

Parts List			
ITEM	QTY	PART NUMBER	DESCRIPTION
1	1	739-3410-00	Diesel Engine Dipstick Brkt
2	1	764-2002-00	Throttle Cable-Kohler Diesel
3	1	618-8063-00	5/16-18 x 3/4 GR 5 Hex bolt Zinc
4	1	613-8047-00	5/16-18 Nylock HEX Nut
5	1	715-3000-00	Diesel Engine Package
6	1	715-3131-00	Alternator
7	1	715-3102-00	Oil Filter
8	1	715-3133-00	Belt
9	1	715-3114-00	Fuel Lift Pump
10	1	786-2006-00	Temperature Water Sender-Lg UTV
11	1	712-3004-00	Diesel Temp Sd/Sw Crush Washer
12	1	613-0062-00	M6-1.0 Hex Flange Nut w/ Serrations
13	1	786-1015-00	16 AWG Insulated Standard Copper Wire
14	1	764-2005-00	Cable Stop Assembly
15	1	785-1030-00	10W 30 Motor Oil 1.5 quarts

Diesel Engine Assembly-1

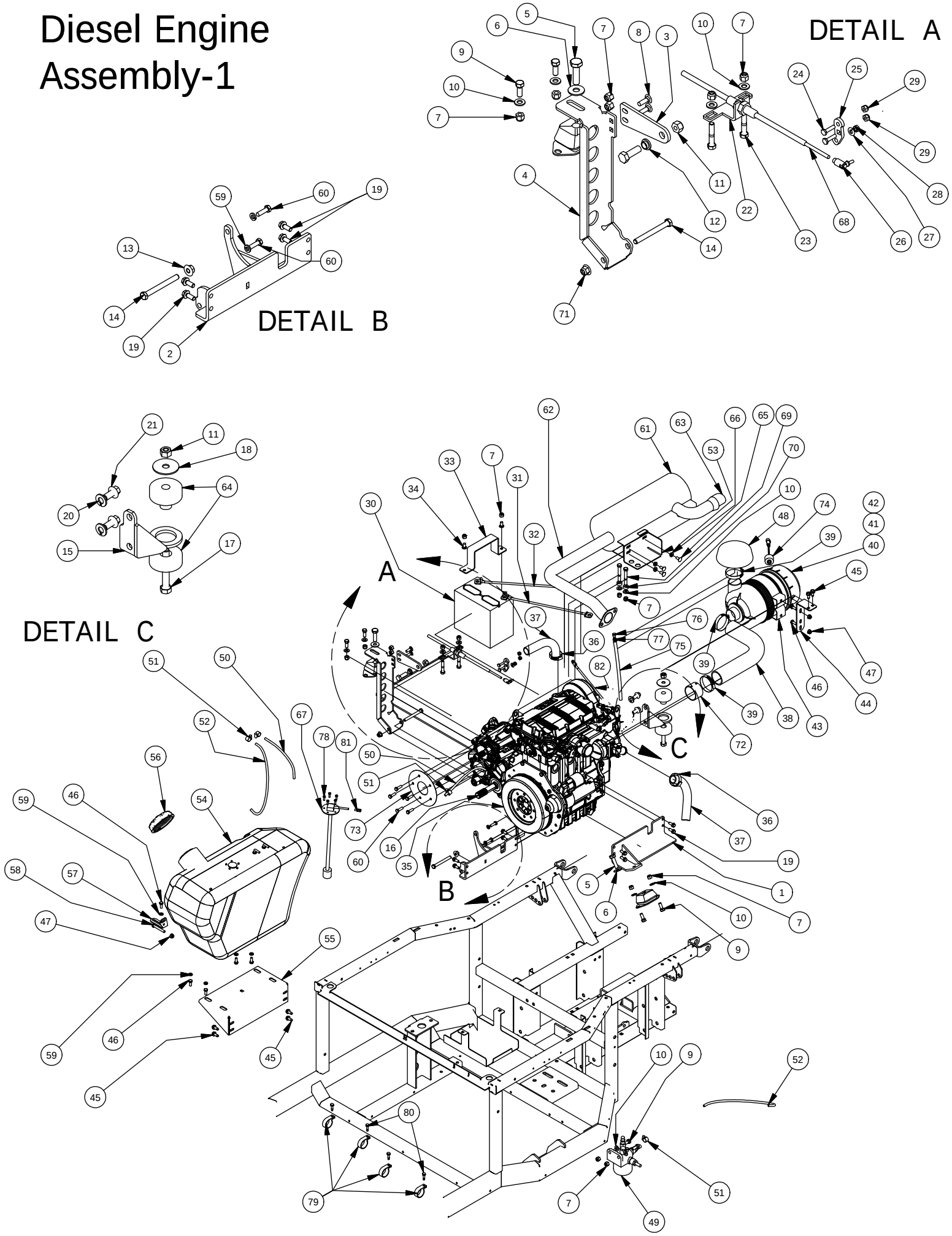

Diesel Engine Assembly-1			
ITEM	QTY	PART NUMBER	DESCRIPTION
1	1	739-2074-00	Left Diesel Engine Arm Assy
2	1	739-2076-00	Diesel/Transmission Bracket/Assy
3	1	739-3390-60	Upper Transmission Mount Tab
4	1	739-3378-00	Team Trans Right Mounting
5	2	618-2084-00	M12 X 1.75 X 45MM Hex Tap Bolt
6	2	619-5010-00	.565 IDx 1.25 ODx 0.95 Washer
7	16	613-5041-00	3/8-16 Nylon Insert Locknut
8	2	618-8065-00	5/16-18 x 1 Carriage Bolt
9	6	618-6049-00	3/8-16 X 1 GR 5 Hex Bolts Zinc
10	10	619-0057-50	3/8 Flat Washer Black Zinc
11	2	613-6037-00	1/2-13 Nylon Insert Locknut
12	1	732-2004-00	Bushing, Oil Impregnated 1/2" ID
13	1	613-5201-00	3/8-16 Serrated Flange Nut
14	2	618-2025-00	3/8" -16 X 3-1/2" hex C/S-Gr5
15	1	739-4006-00	Diesel Rear Motor Arm Assembly
16	1	737-3000-00	Transmission
17	1	618-2006-00	1/2" - 13X3-1/2" Hex Bolt Gr 5
18	1	619-0060-00	1/2 Washer Zinc
19	8	618-6073-00	M8x1.25x20mm Hex Washer Hd MS
20	2	619-5007-00	1/2 Lock Washer Zinc
21	2	618-2086-00	M12x1.75x25mm Hex Tap Bolt
22	1	739-3366-60	Lower Shift Cable Bracket
23	2	618-2024-00	3/8 -16 X 2" Hex Bolt
24	2	618-4007-00	1/4-20 x 1 Grade 5 Hex bolts Zinc
25	1	739-3376-60	Team Trans Shift Lever Ext
26	1	710-1038-00	1/4" X 28 Quick Disc. Rod End
27	1	619-4008-00	1/4 Lock Washer Zinc
28	1	613-0028-00	1/4-28 Hex Nut
29	2	613-8073-00	1/4-20 Nylon Insert Locknut Zinc Orange Nylon
30	1	768-1002-00	12 Volt Battery-Diesel
31	1	764-2500-00	Positive Battery Cable 4Ga.
32	1	764-2502-00	Negative Battery Cable, 4Ga.
33	1	757-3002-00	Diesel Batt Strap
34	2	618-2068-00	3/8 x 3/4" GR 8 Carr Bolts Zinc
35	1	715-3000-00	Diesel Engine Package
36	2	772-2018-00	ABA 32-44mm x 12mm Wide Hose Clamp
37	2	751-3000-00	Coolant Hose 1" ID X 1.25 OD
38	1	736-2005-00	Intake Adapter Hose-Diesel
39	3	672-9052-00	1-15/16 to 2-1/2 hose clamp
40	1	763-1001-00	Air Filter
41	1	763-1002-00	Air Box Cap
42	1	763-3000-00	Air Box Assembly
43	1	772-1100-00	Air Canister Clamp
44	1	739-3370-00	Air Filter Bracket
45	6	618-2021-00	5/16" - 18 3/4" Ind Hex Washr Hd - Type F
46	7	618-8063-00	5/16-18 x 3/4 GR 5 Hex bolt Zinc
47	3	613-8049-00	5/16-18 Nylon Insert Flange Nut Zinc Orange Nylon
48	1	763-2012-00	Rain Cap- Air Filter
49	1	ED0021752880-S	Diesel Engine Fuel Filter
50	1	751-1014-00	7.5 ft. 1/4 Fuel Line - Low Perm
51	5	672-8067-00	Hose Clamp No. 4 - 7/32 - 5/8
52	1	751-1016-00	7.5 ft. 3/16" Hose
53	1	739-2064-00	Muffler Mount Brkt
54	1	767-2001-00	Fuel Tank-Diesel Engine
55	1	739-2058-00	Lower Fuel Tank Support Brkt
56	1	767-2004-00	Fuel Tank Cap-Lg UTV-Diesel
57	1	739-2059-60	Upper Fuel Tank Support Brkt
58	1	618-2034-00	5/16" x 2-1/4" Hex Hd Cap Scr.
59	7	619-8051-00	5/16 Lockwasher Zinc
60	7	618-1080-00	5/16-18 x 1" GR 8 Hex bolt
61	1	715-3012-00	Muffler-Kohler 25 EFI & Diesel
62	1	715-3014-00	Exhaust Mainfold-Diesel-Black
63	1	715-3016-00	Spark Arrestor Kit For Muffler
64	1	732-1014-00	Engine Vibration Mount
65	3	618-8062-50	5/16-18x3/4 Carriage Bolts Black Zinc
66	3	613-9002-00	5/16-18 Hex Flange Nuts Zinc w/Serations
67	1	786-2004-00	Fuel Sender
68	1	764-2008-00	Gear shift Cable-2500 Ext Bed
69	4	618-2078-00	3/8-16 X 2-3/4 Hex C/S GR 2 Zinc
70	2	725-3208-00	.75ODx.4IDx.375"L Spacer
71	1	613-5202-00	3/8-16 Nylock Flange Nut
72	1	703-3390-60	CVT Crush Tube
73	1	726-3254-00	Diesel Transmission Washer
74	1	763-3006-00	Filter Restriction Switch
75	1	751-1018-00	5/16 ID 7/16 OD Hose
76	1	724-1045-00	Breather Plug Threaded
77	1	772-1001-00	5/16 Spring Hose Clamp
78	5	618-2105-00	10-32 x 5/8" Indented hex Head machine Screw
79	4	672-9050-00	3/4 EPDM Cushion Clamp
80	5	630-7040-00	1/4 x 1 Hex Head Tek Screw
81	1	613-0008-00	Male Push on Terminal
82	1	664-0040-00	14" Battery Cable 2 Gauge

Rear Suspension Assembly

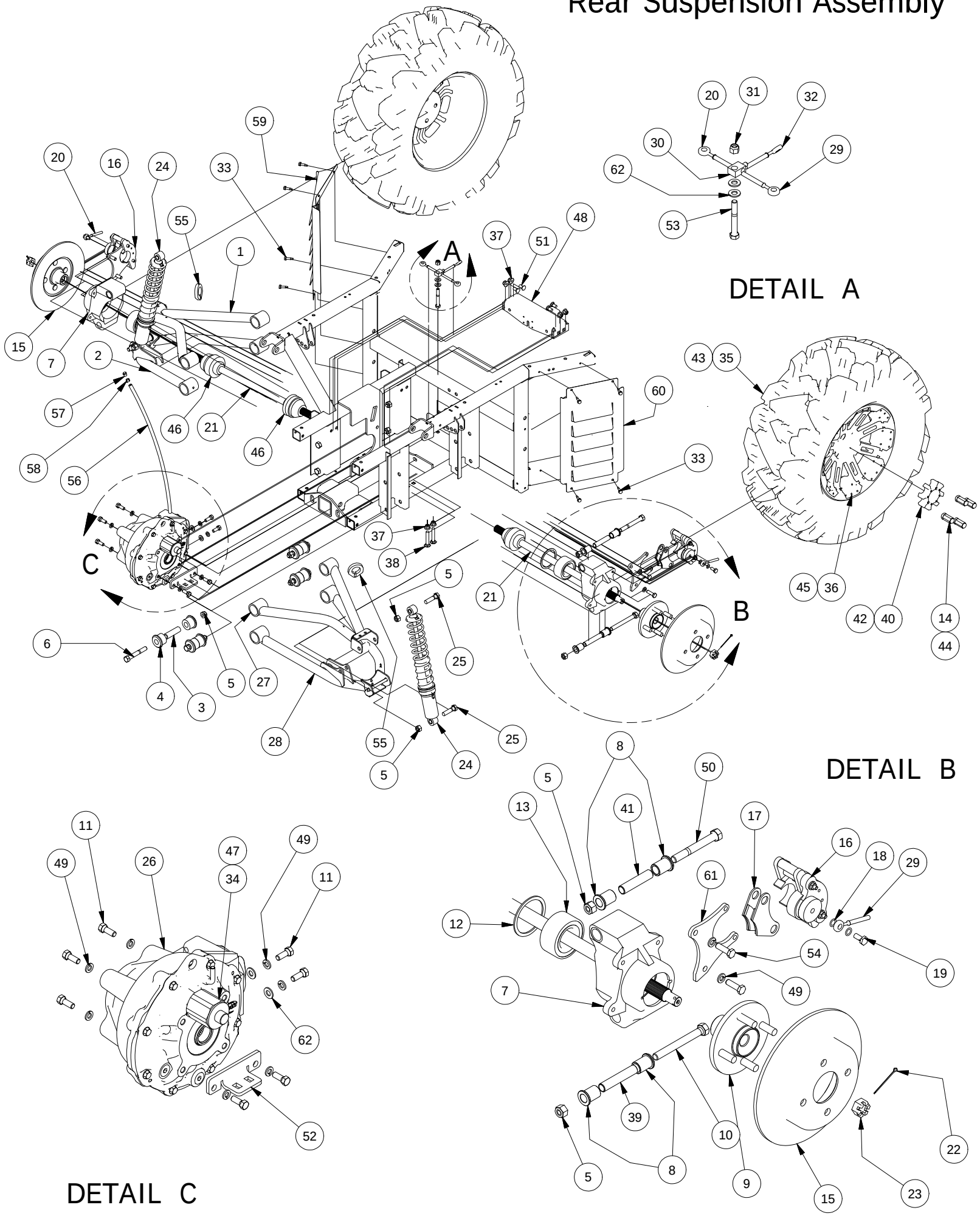

Rear Suspesion Assembly			
ITEM	QTY	PART NUMBER	DESCRIPTION
1	1	787-3210-00	Extended Left Rear Upper A-arm Assy
2	1	787-3212-00	Extended Left Rear Lower A-arm Assy
3	8	732-2001-00	Large MTV A-Arm Bushing Sleeve
4	16	732-2000-00	Large MTV A-Arm Bushing
5	16	613-6037-00	1/2-13 Nylon Insert Locknut
6	8	618-2006-00	1/2" - 13X3-1/2" Hex Bolt Gr 5
7	2	770-1014-00	Independent Rear Suspension
8	8	710-2000-00	Flange BUSHING-Large UTV
9	2	786-2000-00	Hub-Large UTV
10	2	618-2030-00	1/2" -13 x 4.5" Hex Cap Screw
11	7	618-6049-00	3/8-16 X 1 GR 5 Hex Bolts Zinc
12	2	710-2003-00	Retaining Ring-Spindle Bearing
13	2	710-2002-00	Spindle Bearing LRG UTV
14	8	613-0001-00	XD4 Lug Nut
15	2	716-2000-00	Rotor - Large UTV
16	2	616-1051-00	Hydraulic Caliper
17	2	616-1056-00	Brake Pad Kit (2 Pads per Kit)
18	4	616-1025-00	10 mm copper crush washer
19	2	616-1015-00	Banjo Bolt M 10mm x 1.0
20	1	716-3008-00	Brake Line Left Rear-Lg UTV
21	2	737-2034-00	Half-Shaft - Rear Large UTV
22	2	765-1016-00	Rear Hub Castle Nut Cotter Pin
23	2	765-1012-00	Rear Hub Castle Nut
24	2	787-2010-00	Rear Shock-Lg. UTV-Gas & Diesel
25	4	618-5049-00	1/2-13 x 2 GR5 Hex Bolt Zinc
26	1	737-3005-00	Rear Differential, Large MTV
27	1	787-3211-00	Extended Right Rear Upper A-arm assy
28	1	787-3212-00	Extended Right Rear Lower A-Arm Assy
29	1	716-3006-00	Brake Line Right Rear-Lg UTV
30	1	716-3010-00	Brake Line Tee-Rear-Lg UTV
31	1	613-5041-00	3/8-16 Nylon Insert Locknut
32	1	716-3004-00	Brake Line-MC to Rear T-Lg UTV
33	8	630-7040-00	1/4 x 1 Hex Head Tek Screw
34	1	737-3006-00	Rear Diff Lock Solenoid
35	2	722-4100-00	XD4 Rear Tire
36	2	722-4002-00	XD4 Rear Wheel
37	6	613-5202-00	3/8-16 Nylock Flange Nut
38	2	618-2023-00	3/8"-16 x 2-1/4" Carriage Bolt
39	2	725-3026-00	IRS Lower Spacer
40	2	722-4004-00	XD4 Wheel Center Cap
41	2	725-3025-00	IRS Upper Spacer
42	2	722-4110-00	Base Wheel Center Cap
43	2	722-4113-00	Base Rear Tire
44	8	713-1012-00	Open End Lug Nut-Black (Base Model Only)
45	2	722-4007-00	Base Rear Wheel
46	4	712-3222-00	Half Shaft CV Boot Kit
47	1	737-3007-00	Rear Diff Lock Solenoid Spring
48	1	739-3380-00	Rear Diff Cage Top Brace
49	11	619-5037-00	3/8 Lockwasher Zinc
50	2	618-2003-00	1/2" -13 x 4" Hex Cap Screw Gr 5
51	4	618-2068-00	3/8 x 3/4" GR 8 Carr Bolts Zinc
52	1	739-3328-00	Right Rear Differential Mount
53	1	618-2078-00	3/8-16 X 2-3/4 Hex C/S GR2 Zinc
54	4	618-5040-00	3/8-16 x 1-1/4 Hex Bolt GR5
55	2	772-2050-00	Break Line Anchor-1-1/4"
56	1	751-1018-00	5/16 ID 7/16 OD Hose
57	1	724-1045-00	Breather Plug Threaded
58	1	772-1001-00	5/16 Spring Hose Clamp
59	1	726-3259-00	Left Lowered Rear Fender Well
60	1	726-3260-00	Right Lowered Rear Fender Well
61	2	639-0054-00	Brake Caliper Brkt-Ausco-Elect
62	4	619-0057-50	3/8 Flat Washer Black Zinc

Rops Assembly

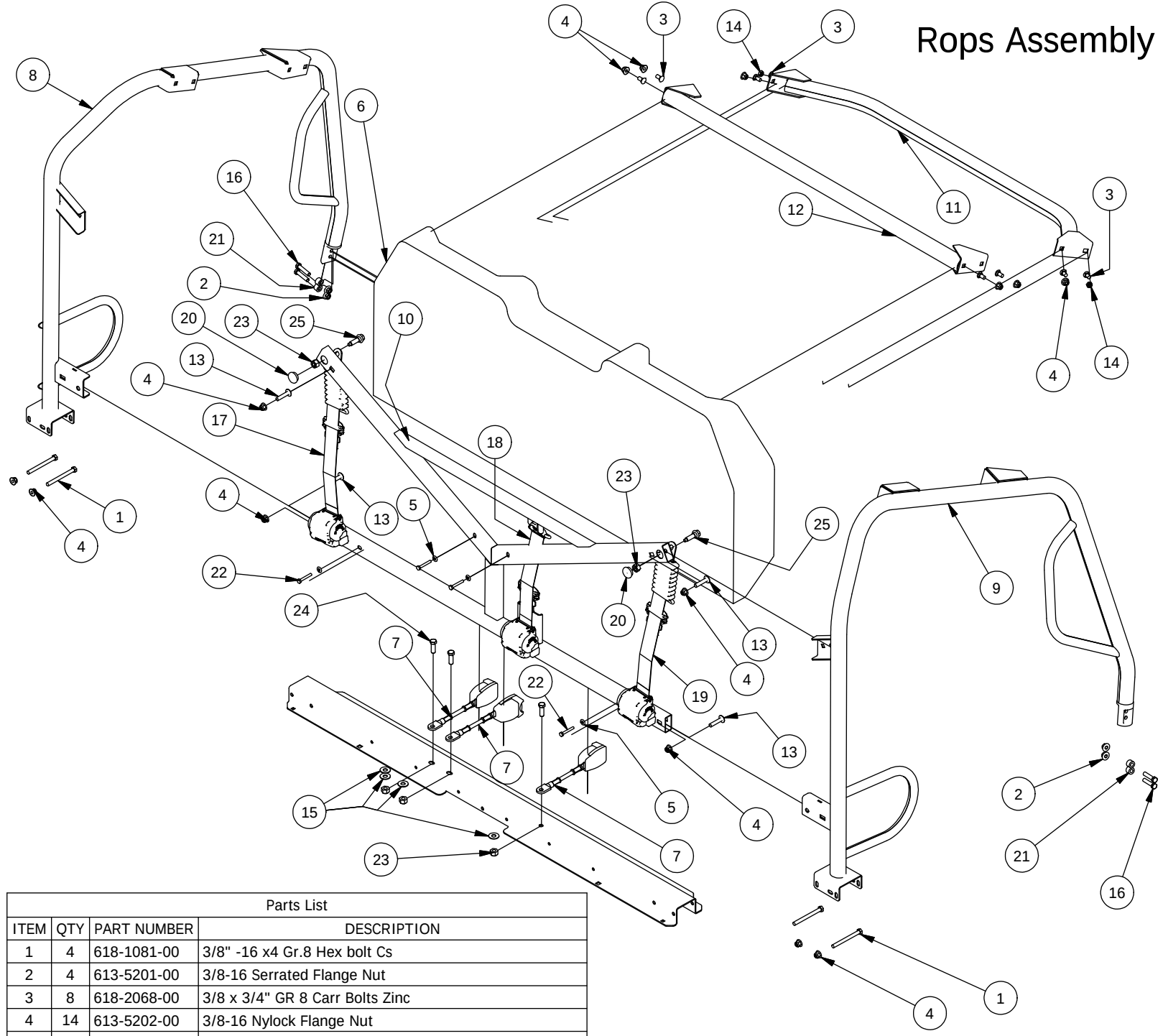

Parts List			
ITEM	QTY	PART NUMBER	DESCRIPTION
1	4	618-1081-00	3/8" -16 x4 Gr.8 Hex bolt Cs
2	4	613-5201-00	3/8-16 Serrated Flange Nut
3	8	618-2068-00	3/8 x 3/4" GR 8 Carr Bolts Zinc
4	14	613-5202-00	3/8-16 Nylock Flange Nut
5	4	619-4008-00	1/4 Lock Washer Zinc
6	1	771-2001-00	Seat Back-Large UTV
7	3	671-0030-00	Seat Belt Latch
8	1	780-3012-00	ROPS Left Hoop Assy
9	1	780-3004-00	ROPS Right Hoop Assy
10	1	780-3002-00	ROPS K Brace Assy For Seat back w/ Integral Headrest
11	1	780-3008-00	ROPS Front Cross Brace Assy
12	1	780-3010-00	ROPS Rear Cross Brace Assy
13	4	618-2048-00	3/8" -16 x 1-3/4" G8 Carriage Bolt
14	2	613-2004-00	3/8"-16 Nyloc Jam Nut
15	4	619-8052-00	7/16 USS Flat Washer Zinc
16	4	618-2008-00	3/8"-16X1-3/4" Gr 8 C/S
17	1	771-1017-00	Seat Belt Assy-3 Point-Front Drivers Side
18	1	771-1016-00	Seat Belt Assy-3 Point-Center
19	1	771-1015-00	Seat Belt Assy-3 Point-Passengers Side
20	2	618-6067-00	Heyco 2713 Hole Plug
21	4	725-4005-00	Spacer, .75 O.D. x .400 I.D. x .500"L
22	4	618-2016-50	1/4-20 x 1-3/4" Hex Bolt
23	5	613-0026-00	7/16-20 Nylon Insert Locknut
24	3	618-2097-00	7/16-20 x 1-1/4 GR5 Hex Cap Screw
25	2	618-2096-00	7/16-20 x 1 3/8 GR5 Shoulder Bolt

Safety Nets Assemblies

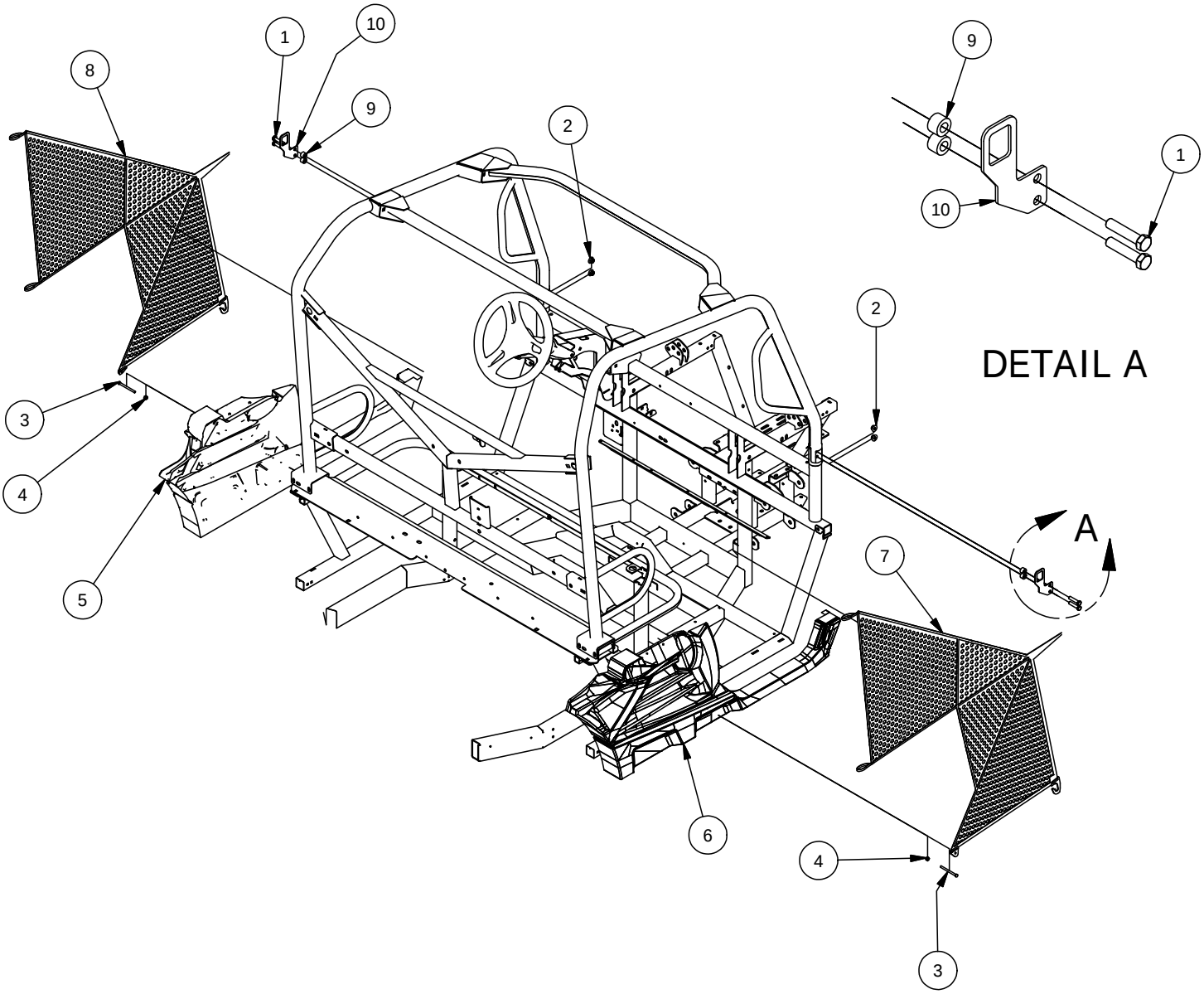

Net Assemblies			
ITEM	QTY	PART NUMBER	DESCRIPTION
1	4	618-2008-00	3/8"-16X1-3/4" Gr 8 C/S
2	4	613-5201-00	3/8-16 Serrated Flange Nut
3	2	618-1055-50	1/4-20 X3" (GRS) Carriage Bolt
4	4	613-8073-50	1/4-20 Nylon Insert Locknut BL
5	1	780-2030-10	Seat Panel Left-Large UTV-Blk
6	1	780-2025-10	Seat Panel Right-Large UTV-Blk
7	1	771-1010-00	Side Net - Right Side
8	1	771-1009-00	Side Net - Left Side
9	4	725-4005-00	Spacer, .75 O.D. x .400 I.D. x .500"L
10	2	739-4069-00	Front side net female buckle Mounting Brkt 2017

Flat Bed Assembly

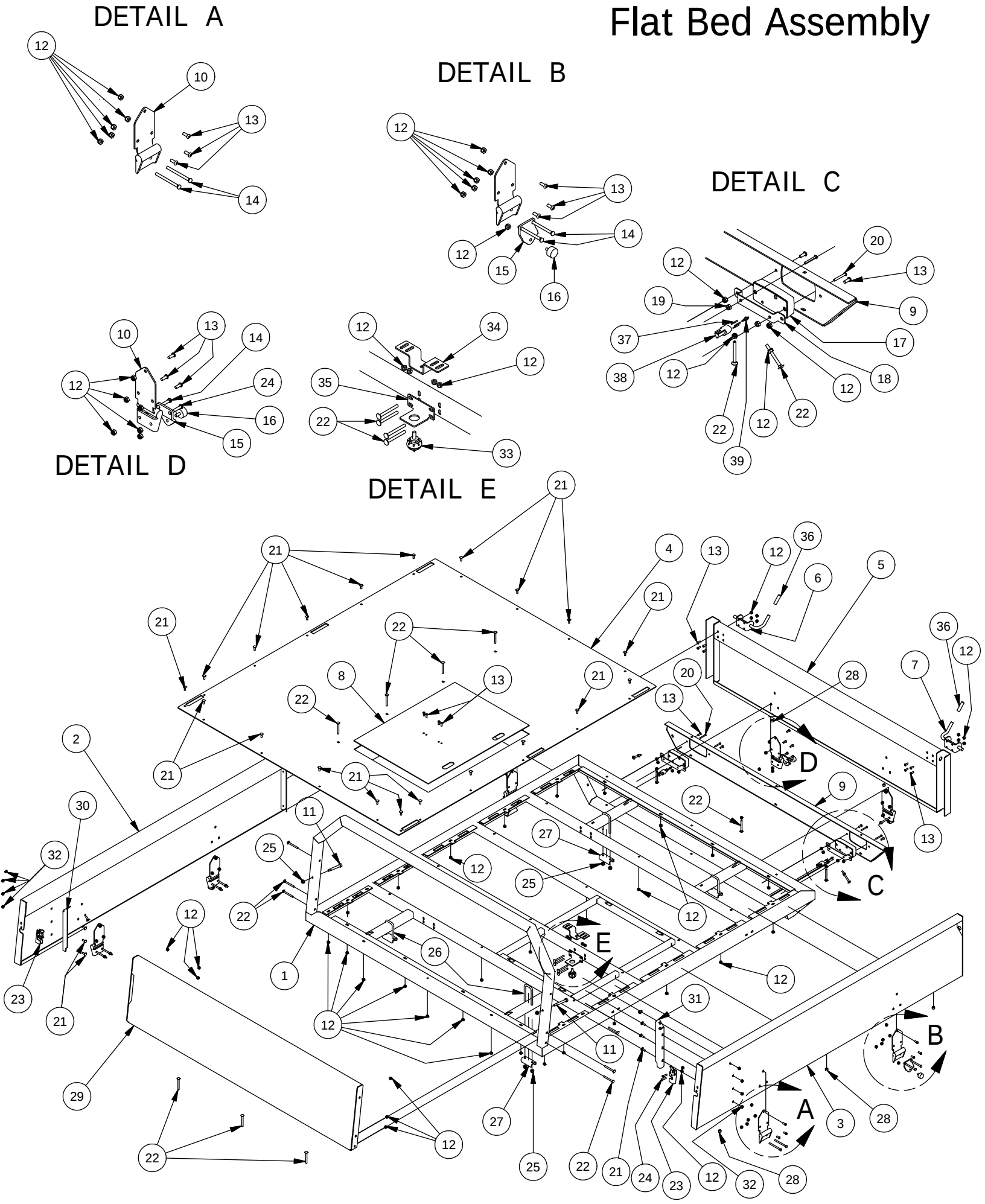

Flat Bed Assembly			
ITEM	QTY	PART NUMBER	DESCRIPTION
1	1	760-1000-00	Truck Series Bed Frame Assy
2	1	760-1004-00	Truck Right Bed Panel Assy
3	1	760-1002-00	Truck Left Bed Panel Assy
4	1	726-4080-00	Truck Bed Floor Panel-AL
5	1	760-1006-00	Truck Bed Tailgate Assembly
6	1	652-6001-00	Door Latch-Right
7	1	652-6002-00	Door Latch-Left
8	1	726-4082-00	Truck Bed Eng. Access Door-AL
9	1	726-4078-00	Truck Bed Taillight Panel-AL
10	6	753-1012-00	Extended Bed Hinge
11	2	618-2101-00	3/8-16 X 2-1/2" Shoulder Bolt
12	96	613-8073-50	1/4-20 Nylon Insert Locknut BL
13	34	618-8064-50	1/4-20 x 5/8 Button Socket C/S
14	10	618-1055-50	1/4-20 X3" (GRS) Carriage Bolt
15	4	739-4469-00	Truck Bed Side Gate Brkt
16	4	758-1000-00	Rubber Stops
17	2	688-1001-00	Tail/Brake Light Assembly
18	2	739-4460-00	Truck Bed Taillight Bracket
19	4	613-5019-00	10-24 Nylon Insert Locknut
20	4	618-8070-00	10-24 1 1/2 Button Stainless Bolt
21	28	618-1083-00	1/4-20 x 1" Carriage Bolt
22	22	618-2045-00	1/4-20 x 2 1/2 Carriage Bolt
23	2	652-6000-00	Door Latch
24	6	618-2037-50	1/4-20 X1 Button Socket C/S Black
25	10	613-8049-00	5/16-18 Nylon Insert Flange Nut Zinc Orange Nylon
26	4	618-2103-00	5/16 1 1/2x3 3/4 Bend U-Bolt GR 8 Zinc
27	4	739-3891-00	Truck Bed U-Bolt Brkt
28	8	729-1002-00	Buttom Bumper-Tailgate-2500
29	1	760-1008-00	Bed Front assembly
30	1	739-4483-00	Truck Bed Side Panel Gusset Right
31	1	739-4482-00	Truck Bed Side Panel Gusset Left
32	8	613-8073-00	1/4-20 Nylon Insert Locknut Zinc Orange Nylon
33	1	739-2300-00	Access Door Latch Pin & Grommet
34	1	739-4480-00	Truck Bed Engine Access Door Brkt1
35	1	739-4481-00	Truck Bed Engine Access Door Brkt2
36	2	745-2002-00	Extended Bed Latch Grip
37	6	688-1012-00	Headlight Recept. Pin
38	2	688-1020-00	Tail-Brake Light Receptical
39	2	688-1022-00	W3P Deutsch Receptcal Wedge

1000cc Left
791-2014-00 Orange
791-2014-10 Gray
791-2014-20 O.D. Green

1000cc Right
791-2015-00 Orange
791-2015-10 Gray
791-2015-20 O.D. Green

Decal Warning Cluster-2500
791-2030-00

2500 Truck Series Left
791-2027-00 Orange
791-2027-10 Gray
791-2027-20 O.D. Green

2500 Truck Series Right
791-2028-00 Orange
791-2028-10 Gray
791-2028-20 O.D. Green

Tailgate 2500 Truck Series
791-2029-00 Orange
791-2029-10 Gray
791-2029-20 O.D. Green

Dash Intimidator
791-2020-00 Orange
791-2020-10 Gray
791-2020-20 O.D. Green

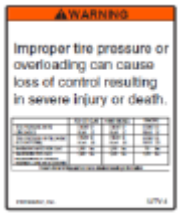

Load Rating Decal
791-2035-00

Muffler Hot Warning Label
791-1000-00

ROPS
791-2096-00

Helmet Logo Decal
491-2099-00

Camo 4x4 Decal
791-2097-00

Camo XD4 Decal
791-2098-00

A WARNING

Improper Use of Off-Highway Vehicles Can Cause Severe Injury or Death

Be Prepared
- Fasten seat belts.
- Wear an approved helmet and protective gear.
- Fasten nets on all positions equipped with them.
- Each rider must be able to sit with back against seat, feet flat on floor [and foot rests], and hands on steering wheel or handhold[s] [where equipped]. Stay completely inside the vehicle.

Drive Responsibly
Avoid loss of control and rollovers:
- Avoid abrupt maneuvers, sideways sliding, skidding, or fishtailing, and never do donuts.
- Slow down before entering a turn.
- Avoid hard acceleration when turning, even from a stop.
- Plan for hills, rough terrain, ruts, and other changes in traction and terrain. Avoid paved surfaces.
- Avoid side hilling (riding across slopes).

Rollovers have caused severe injuries and death, even on flat, open areas.

Be Sure Riders Pay Attention and Plan Ahead
If you think or feel the vehicle may tip or roll, reduce your risk to injury:
- Keep a firm grip on the steering wheel or handholds and brace yourself.
- Do not put any part of your body outside of the vehicle for any reason.

Require Proper Use of Your Vehicle
Do your part to prevent injuries:
- Do not allow careless or reckless driving.
- Make sure operators are 16 or older with a valid driver's license.
- Do not let people drive or ride after using alcohol or drugs.
- Do not allow operation on public roads (unless designated for off-highway vehicle access) -collisions with cars and trucks can occur.
- Do not exceed seating capacity of your vehicle.

DRIVER UNDER 16

Locate and Read Owner's Manual; Follow All Instruction and Warnings

Training Courses To Teach ROV Operation Are Available, Check With Your Dealer.

Check with your dealer regarding state and local ROV Operation Laws.

This Tag Is Only To Be Removed By The Owner After Purchase.

General Warning Tag
791-2119-00

RHOVA Decal
791-2120-00