Intimidator UTV Part Manual

Crew Cab 1000cc Diesel

www.IntimidatorUTV.com

Revision Date 1-1-17

Table of Contents

Front Suspension Assembly 3

Parts List 4

Lights and Break Assemblies 5

Parts List 6

Seat, Dash, and Grill Assemblies 7

Parts List 8

Plastic Assembly 9

Parts List 10

CVT and Radiator Assembly.....11

Parts List.....12

Engine Assembly Only 13

Engine Assembly in Frame 14

Parts List 15

Rear Suspension Assembly 16

Parts List 17

Roll Cage Assembly 18

Parts List 19

Safety Net Assemblies 20

Bed Assembly (1 of 2) 21

Parts List 22

Bed Assembly (2 of 2) 23

Parts List 24

Decals 25-26

Front Suspension Assembly

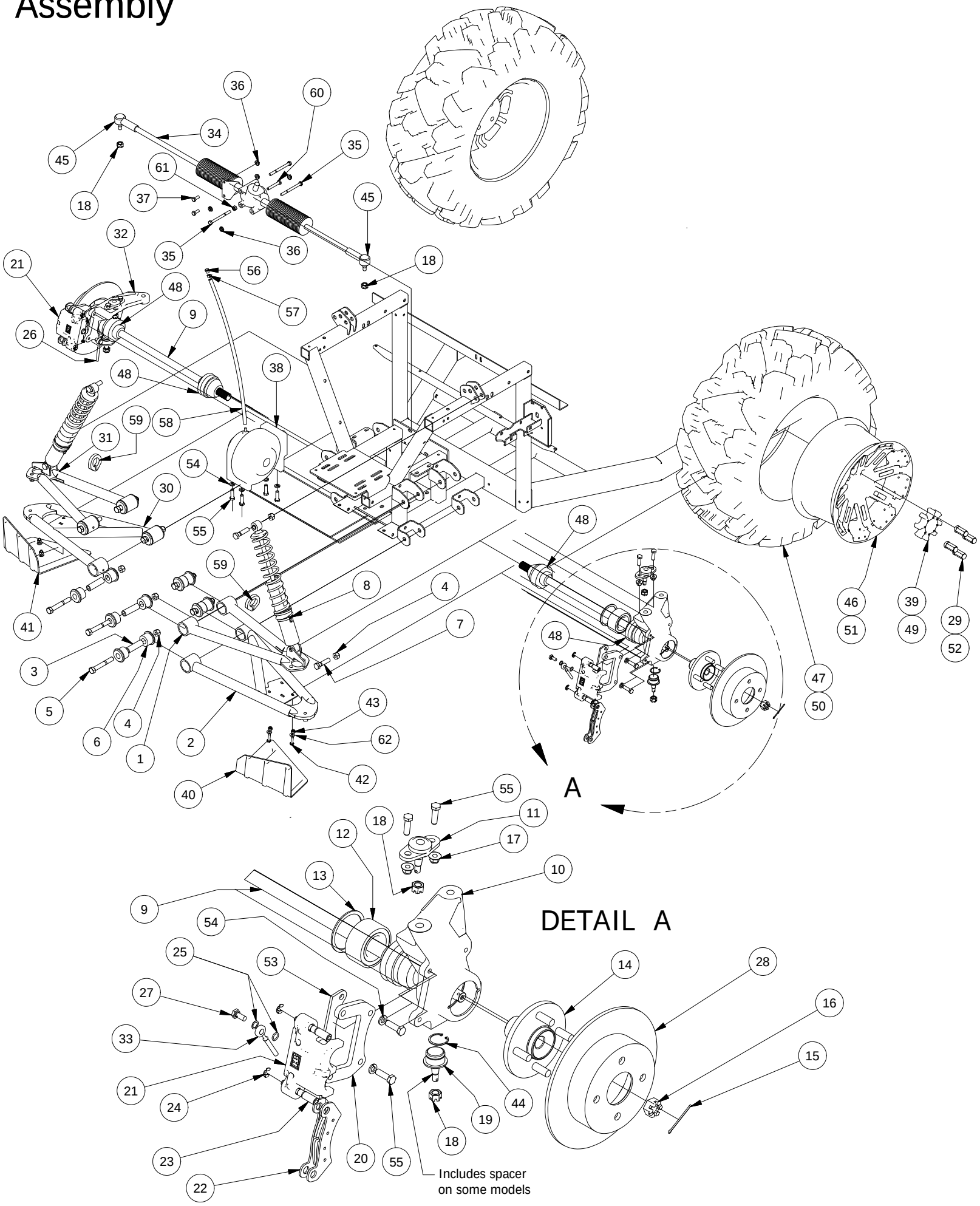

Parts List			
ITEM	QTY	PART NUMBER	DESCRIPTION
1	1	787-3201-00	Left Front Upper A-arm Assy
2	1	787-3203-00	Left Front Lower A-Arm Assy
3	8	732-2001-00	Large MTV A-Arm Bushing Sleeve
4	12	613-6037-00	1/2-13 Nylon Insert Locknut
5	8	618-2006-00	1/2" - 13X3-1/2" Hex Bolt Gr 5
6	16	732-2000-00	Large MTV A-Arm Bushing
7	4	618-5049-00	1/2-13 x 2 GR5 Hex Bolt Zinc
8	2	787-2005-00	Front Shock-Kohler 25 Lg UTV
9	2	737-2029-00	Half-Shaft - Front Large UTV
10	1	737-2020-00	Spindle, Left Front-Large UTV
11	2	799-2003-00	Ball Joint-Spindle-Upper High Strength
12	2	710-2002-00	Spindle Bearing LRG UTV
13	2	710-2003-00	Retaining Ring-Spindle Bearing
14	2	786-2000-00	Hub-Large UTV
15	2	765-1016-00	Rear Hub Castle Nut Cotter Pin
16	2	765-1012-00	Rear Hub Castle Nut
17	4	613-5202-00	3/8-16 Nylock Flange Nut
18	6	613-2003-00	M12 X 1.25 Castle Nut
19	2	799-2000-00	Ball Joint-Spindle-Lower
20	2	739-2050-60	Brake Caliper Brkt-Adrenalin
21	2	716-2005-00	Brake Caliper Assy-Large UTV
22	4	716-2006-00	Brake Pad
23	2	716-2007-00	Brake Caliper Slide Pin
24	2	716-2008-00	Caliper Assy Snap Ring-Adrenalin
25	4	616-1025-00	10 mm copper crush washer
26	1	716-3000-00	Brake Line Front Left-Lg UTV
27	2	616-1015-00	Banjo Bolt M 10mm x 1.0
28	2	716-2000-00	Rotor - Large UTV
29	8	613-0001-00	1/2 Lug Nut-44011- Front
30	1	787-3202-00	Right Front Lower A-Arm Assy
31	1	787-3200-00	Right Front Upper A-Arm Assy
32	1	737-2022-00	Spindle, Right Front-Large UTV
33	1	716-3002-00	Brake Line Front Right-Lg UTV
34	1	731-3000-00	Rack & Pinion, Large MTV
35	3	618-2060-00	5/16-18 X 3 1/2 GR 5 Hex Bolts Zinc
36	5	613-9002-00	5/16-18 Hex Flange Nuts Zinc w/Serations
37	2	618-8063-00	5/16-18 x 3/4 GR 5 Hex bolt Zinc
38	1	756-3000-00	Front Differential-Larg UTV
39	2	722-4004-00	XD4 Wheel Center Cap
40	1	780-2206-00	Left A Frame Guard-2500
41	1	780-2207-00	Right A Frame Guard-2500
42	4	618-4007-00	1/4-20 x 1 Grade 5 Hex bolts Zinc
43	4	613-8073-50	1/4-20 Nylon Insert Locknut BL
44	2	799-2001-00	Retaining Ring-Lg MTV Ball Jt
45	2	710-1014-00	Tire Rod End-Intimidator
46	2	722-4000-00	XD4 Front Wheel
47	2	722-4106-00	XD4 Front Tire
48	4	712-3222-00	Half Shaft CV Boot Kit
49	2	722-4110-00	Base Wheel Center Cap
50	2	722-4112-00	Base Model Front Tire
51	2	722-4006-00	Base Model Front Wheel
52	8	713-1012-50	Open End Lug Nut-Black (Base Model Only)
53	2	725-3210-60	Caliper Brake Mount Spacer
54	8	619-5037-00	3/8 Lockwasher Zinc
55	12	618-5040-00	3/8-16 x 1-1/4 Hex Bolt GR5
56	1	724-1045-00	Breather Plug Threaded
57	1	772-1001-00	5/16 Spring Hose Clamp
58	1	751-1018-00	5/16 ID 7/16 OD Hose
59	2	772-2050-00	Break Line Anchor-1-1/4"
60	1	618-2071-00	5/16-18X 2" Hex Head Cap Screw
61	1	613-8047-00	5/16-18 Nylock HEX Nut
62	4	619-0010-50	1/4 Flat Washer Black

Lights and Brake Assemblies

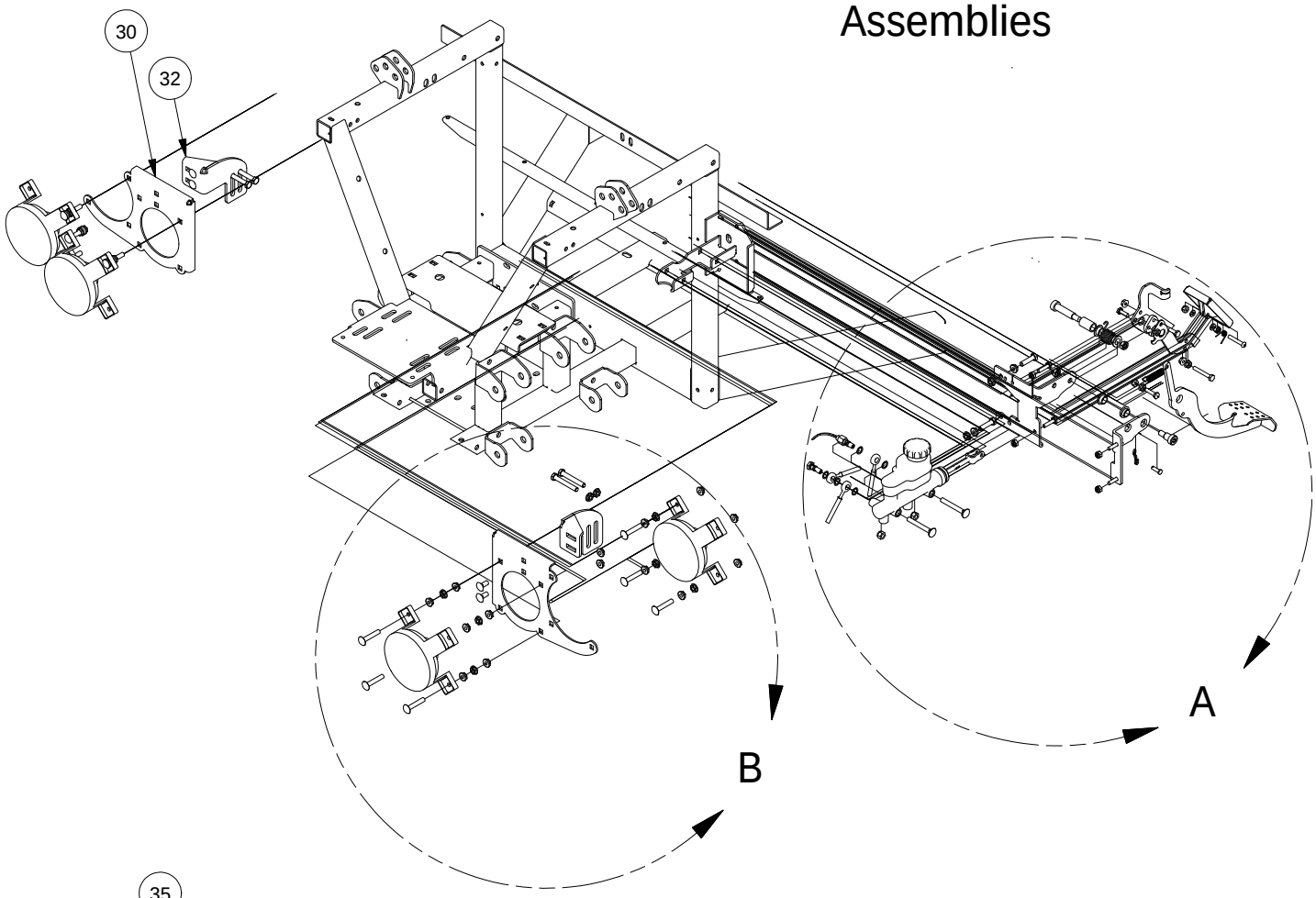

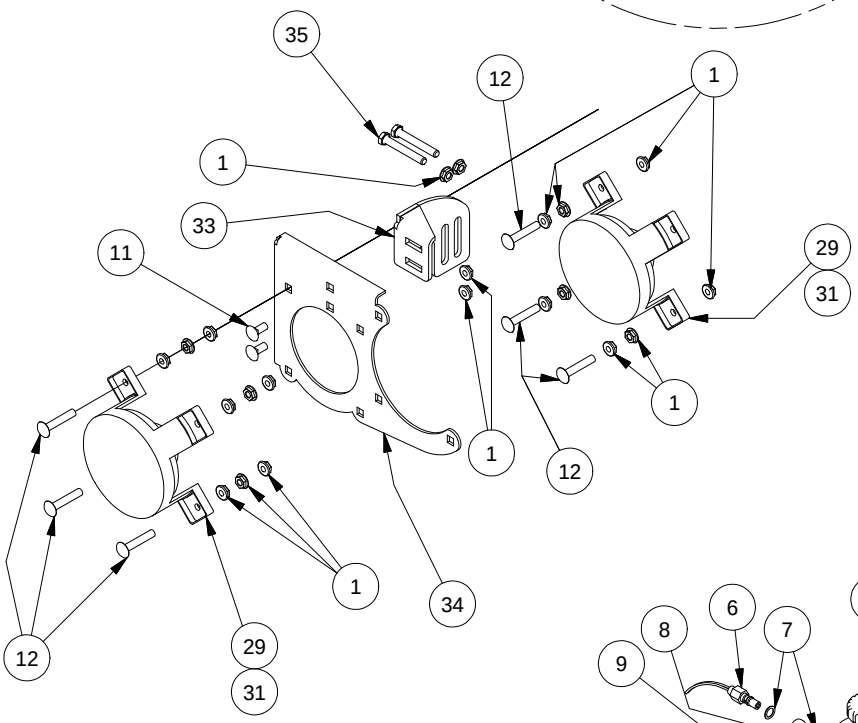

DETAIL B

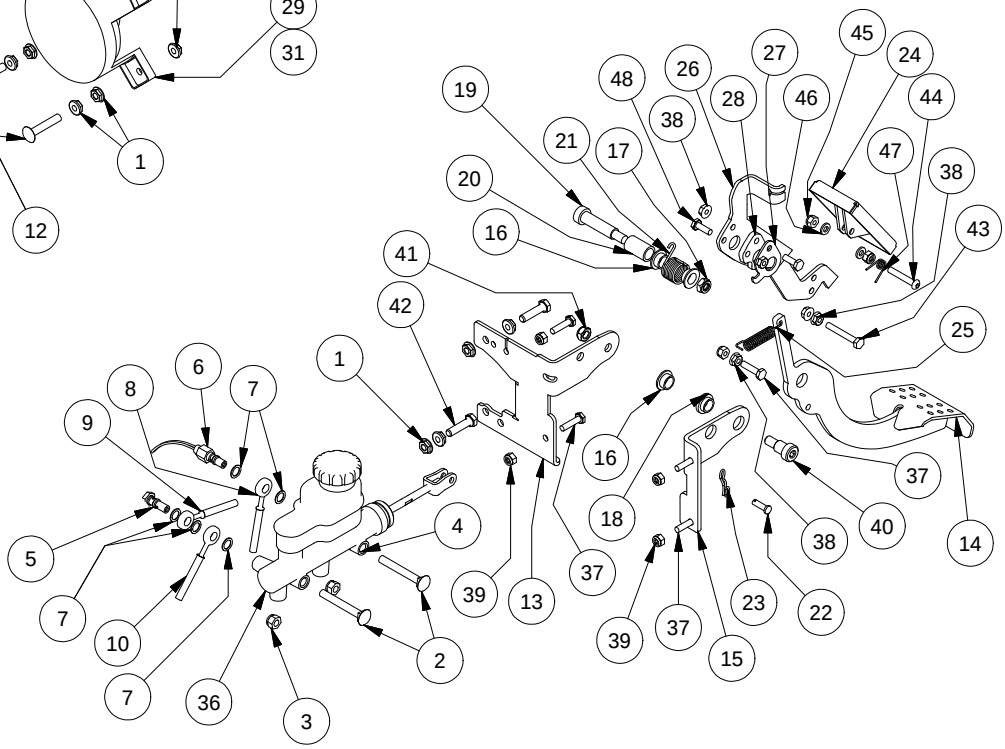

DETAIL A

Parts List			
ITEM	QTY	PART NUMBER	DESCRIPTION
1	48	613-9002-00	5/16-18 Hex Flange Nuts Zinc w/Serations
2	2	618-2019-00	5/16" - 18 X 2-1/2" Carriage Bolt
3	2	613-8047-00	5/16-18 Nylock HEX Nut
4	1	716-1000-00	Master Cylinder, Dual Cylinder
5	1	716-1017-00	Banjo Bolt-Double-10mm-1.0
6	1	777-1011-00	Brake Switch-Banjo-2012
7	5	616-1025-00	10 mm copper crush washer
8	1	716-3012-00	Brake Line-MC to Rear T-Lg UTV
9	1	716-3000-00	Brake Line Front Left-Lg UTV
10	1	716-3002-00	Brake Line Front Right-Lg UTV
11	4	618-8062-00	5/16-18x3/4 Carriage Bolts Zinc
12	12	618-4708-00	5/16-18 x 1-3/4 Carriage bolt
13	1	739-4202-00	Brake Pedal Bracket-Right-2500
14	1	716-2012-00	Brake Pedal Assy-Large UTV
15	1	739-4200-00	Brake Pedal Bracket Left-2500
16	3	632-5000-00	1/2 IDx 5/8 x 5/16 OIB Bushing
17	1	613-2004-00	3/8"-16 Nyloc Jam Nut
18	1	732-2003-00	Bushing, Oil Impregnated
19	1	618-6064-00	12"X1-3/4" Shoulder Bolt
20	1	725-1009-00	Pedal Spring Spacer LRG UTV 1-1/8 spacer
21	1	734-2002-00	Spring-Accelerator Pedal
22	1	620-1000-00	Clevis Pin, 1/4" x 3/4"
23	1	620-1002-00	Bow Tie Clip
24	1	755-1004-00	Accelerator Pedal Assy-LG UTV
25	1	734-2000-00	Spring-Park Brake
26	1	739-4215-00	Accel Pedal Lever
27	1	739-4216-00	Accel Pedal Spring Anchor
28	1	725-1007-00	Accel Pedal Spacer
29	4	786-0016-00	Headlight-High Beam-Large UTV
30	1	739-4054-00	Head Light Bracket-Right
31	1	788-1012-00	4717 LED Headlight
32	1	739-4058-00	Head Light Bracket Brace-Right
33	1	739-4056-00	Head Light Bracket Brace-Left
34	1	739-4052-00	Head Light Bracket-Left
35	4	618-2034-00	5/16" x 2-1/4" Hex Hd Cap Scr.
36	1	785-1020-00	Break Fluid DOT3 .3 quarts
37	5	618-4007-00	1/4-20 x 1 Grade 5 Hex bolts Zinc
38	5	613-9001-00	1/4-20 Hex Flange Nuts Zinc W/Serrations
39	5	613-8073-00	1/4-20 Nylon Insert Locknut Zinc Orange Nylon
40	1	618-6062-00	1/2" x 5/8" Soc. Shoulder Bolt
41	1	613-2004-00	3/8"-16 Nyloc Jam Nut
42	2	618-2029-00	5/16" x 1-1/4" Hex C/S Gr 5
43	1	618-2016-50	1/4-20 x 1-3/4" Hex Bolt
44	1	618-2038-50	1/4-20 X1-1/2" BH Socket Scr Blk
45	2	613-8073-50	1/4-20 Nylon Insert Locknut BL
46	2	619-4012-00	.255 ID x .500 OD x .075 Thick TFE Washer
47	1	734-2003-00	Spring-Accelerator Pedal Assy
48	2	618-8052-00	1/4-20 x 3/4 Grade 5 Hex bolts Zinc

Seat, Dash, and Grill Assemblies

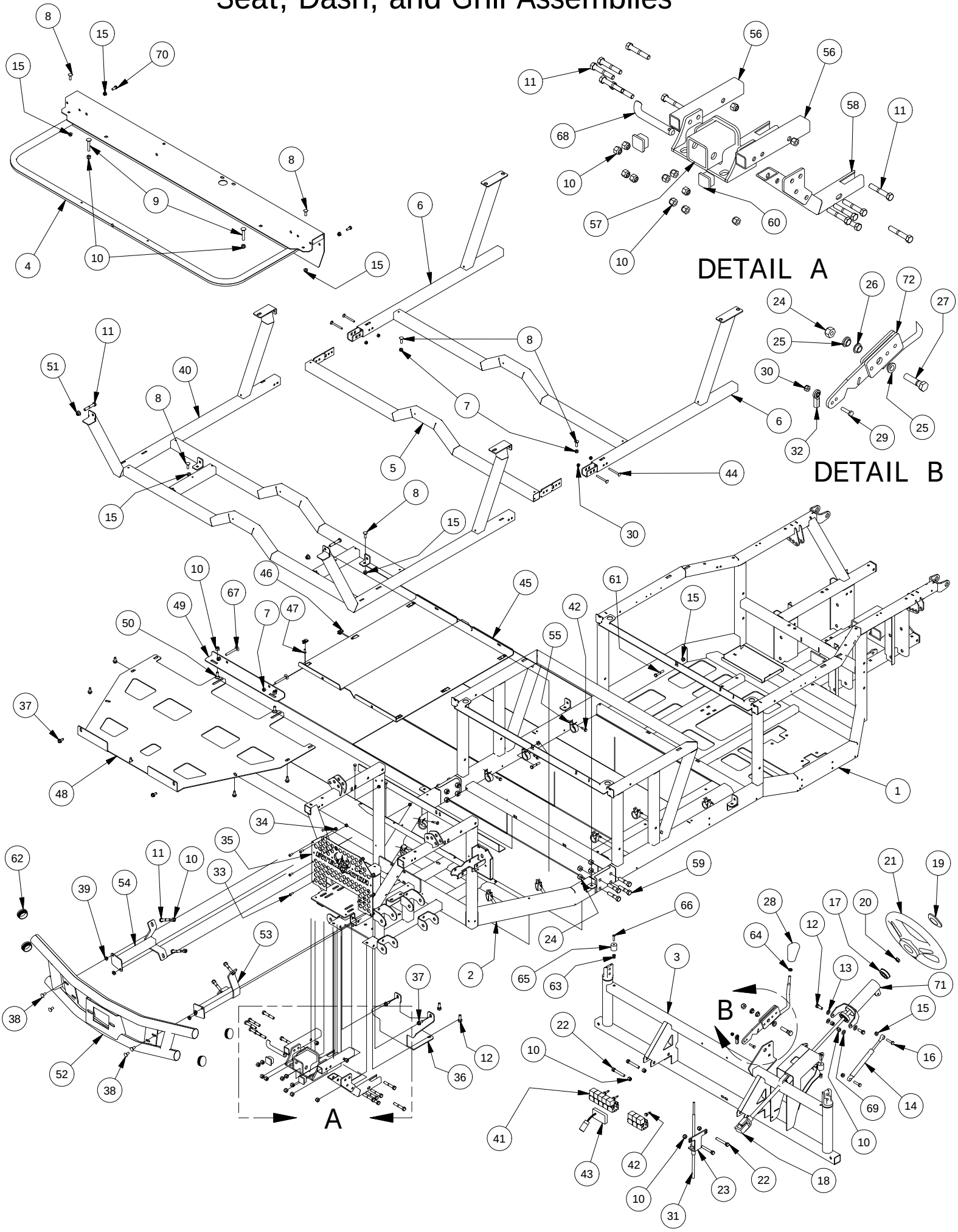

Parts List			
ITEM	QTY	PART NUMBER	DESCRIPTION
1	1	770-3012-00	Crew Cab Rear Frame Assy-Diesel
2	1	770-3011-00	Front Frame-Truck/Crew Cab
3	1	770-3002-00	Dash Support Assy.
4	1	770-3306-00	Front Seat Frame Assembly Crew Cab
5	1	770-3003-00	Floor Board Support Rear Center Tube Assy
6	1	770-3001-00	Crew Cab Rear Floor Board Support Assy
7	4	613-8047-00	5/16-18 Nylock HEX Nut
8	10	618-8065-00	5/16-18 x 1 Carriage Bolt
9	6	618-2023-00	3/8"-16 x 2-1/4" Carriage Bolt
10	30	613-5041-00	3/8-16 Nylon Insert Locknut
11	18	618-2022-00	3/8" - 16 X 2-1/4" Hex Bolt
12	4	618-6049-00	3/8-16 X 1 GR 5 Hex Bolts Zinc
13	2	619-0012-00	3/8 ID x 1/8 Plastic Washer
14	1	735-2005-00	Tilt Steering Gas Spring
15	14	613-8049-00	5/16-18 Nylon Insert Flange Nut Zinc Orange Nylon
16	2	618-1077-00	5/16 x 1-1/4 G8 Zn Hex Bolt
17	2	720-4060-00	Steering Column Bearing
18	1	737-5002-00	Steering Shaft Assembly-Large UTV
19	1	722-2502-00	Steering Wheel Cap-Hurricane
20	1	737-5003-00	Steering Shaft Wheel Nut
21	1	722-2500-00	Steering Wheel Large UTV
22	4	618-2069-00	3/8" - 16 X 2-1/2" Hex Hd Cap Screw
23	1	739-3364-60	Upper Shift Cable Bracket
24	9	613-6037-00	1/2-13 Nylon Insert Locknut
25	2	732-2003-00	Bushing, Oil Impregnated
26	1	632-5000-00	1/2 IDx 5/8 x 5/16 OIB Bushing
27	1	618-5049-00	1/2-13 x 2 GR5 Hex Bolt Zinc
28	1	745-2000-00	Shift Lever Knob-Large UTV
29	3	618-4007-00	1/4-20 x 1 Grade 5 Hex bolts Zinc
30	7	613-8073-00	1/4-20 Nylon Insert Locknut Zinc Orange Nylon
31	1	764-2006-00	Gear Shift Cable-2500 TRK SERIES & CREW CAB
32	1	799-1002-00	1/4-28, Right Hand Thread Heim
33	12	618-8064-50	1/4-20 x 5/8 Button Socket C/S
34	12	613-8073-50	1/4-20 Nylon Insert Locknut BL
35	1	726-4065-00	Front Grill insert 2015
36	1	726-3210-00	Brush Guard Skid Plate
37	9	618-2021-00	5/16" - 18 3/4" Ind Hex Washr Hd - Type F
38	8	618-8062-00	5/16-18x3/4 Carriage Bolts Zinc
39	8	613-9002-00	5/16-18 Hex Flange Nuts Zinc w/Serations
40	1	770-3005-00	Floor Board Support Assembly Crew Cab Front
41	8	786-0005-00	12 Volt Cube Relay
42	15	630-7040-00	1/4 x 1 Hex Head Tek Screw
43	1	786-2002-00	PMW Controller, Team Rear Diff
44	4	618-2045-00	1/4-20 x 2 1/2 Carriage Bolt
45	1	726-4014-00	Truck Series Skid Plate
46	6	613-0054-00	1/4-20 Cage Nut
47	6	618-8064-00	1/4-20 x 5/8 Buttonhead Socket C/S 18-8 SS
48	1	726-4012-00	Skid Plate - Kohler 750 EFI & DIESEL
49	1	739-3902-00	Truck Series Skid Plate Front Brkt
50	2	618-2011-00	3/8 - 16 X 1" Carriage Bolt
51	2	613-5202-00	3/8-16 Nylock Flange Nut
52	1	770-3325-00	Intimidator Bumper 2015
53	1	739-3221-00	Brush Guard Mtg Brkt-Left
54	1	739-3220-00	Brush Guard Mtg Brkt-Right
55	10	672-9000-00	1/2 EPDM Cushion Clamp
56	2	703-4400-60	Front Receiver Tube Mtg Tube
57	1	793-3210-00	Front ReceiverAssembly
58	2	703-4401-60	Front Receiver Bottom Tube Intimidator
59	8	618-6066-00	1/2"-13x2-1/4 Gr8 Hex Cap Scr
60	2	714-1002-00	1-1/4"x1-1/4" Black Tube Plug
61	2	618-8059-00	5/16-18 x 1-3/4 Grade 5 Hex Bolt
62	4	614-3410-00	1-3/4" Round Tubing Plug
63	2	619-0026-00	Rivnut 1/4-20 Steel
64	1	613-6051-00	3/8-24 Hex Nut Zinc
65	2	729-1000-00	Hood Rest Bumper-Lg UTV
66	2	618-2037-50	1/4-20 X1 Button Socket C/S Black
67	2	618-4709-00	5/16-18 x 2 3/4 Carriage Bolts
68	1	793-3212-00	Hitch Pin
69	2	619-0057-50	3/8 Flat Washer Black Zinc
70	2	618-8063-00	5/16-18 x 3/4 GR 5 Hex bolt Zinc
71	1	731-1200-00	Steering Column Assy- Large UTV
72	1	769-3000-00	Shift Lever Assembly 2500 Series

Plastics Assembly

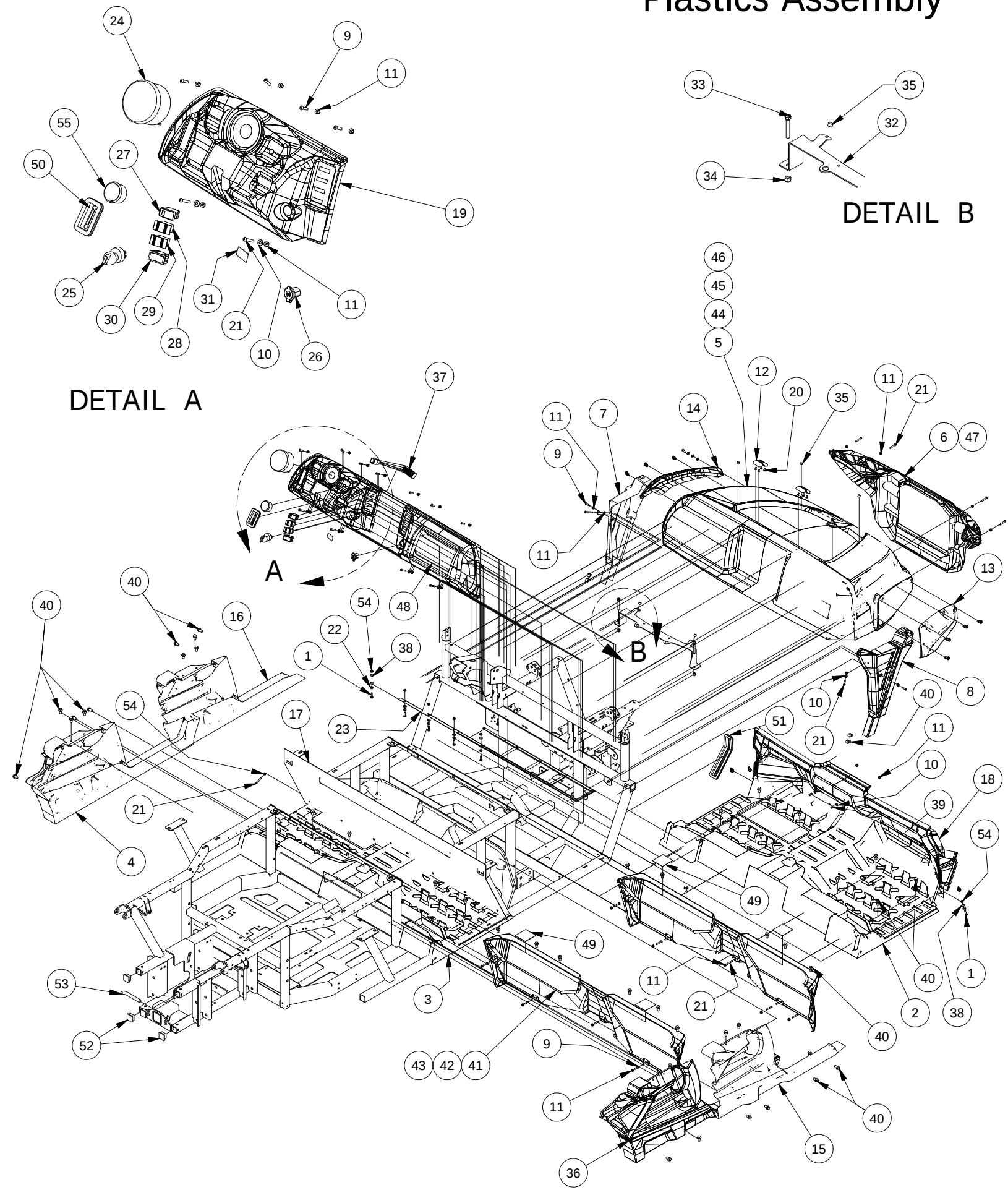

Parts List			
ITEM	QTY	PART NUMBER	DESCRIPTION
1	9	618-4007-00	1/4-20 x 1 Grade 5 Hex bolts Zinc
2	1	780-2015-10	Floor Board-Large UTV-Black
3	1	780-2210-10	Rear Floor Board Crew Cab
4	1	780-2013-10	Left Rear Lower Kick Panel, Crew Cab
5	1	759-2000-00	Hood Large UTV-Orange
6	1	780-2060-10	XD4 Front Grill
7	1	780-2055-10	Lower Front Fender Flare-Left
8	1	780-2050-10	Lower Front Fender Flare-Right
9	23	618-2037-50	1/4-20 X1 Button Socket C/S Black
10	24	619-0010-50	1/4 Flat Washer Black
11	31	613-8073-50	1/4-20 Nylon Insert Locknut BL
12	2	653-5010-00	Hood Hinge
13	1	780-2012-10	Upper Front Fender Flare-Right
14	1	780-2011-10	Upper Front Fender Flare-Left
15	1	780-2209-10	Passenger Front Kick PNL. 4PSG
16	1	780-2208-10	Driver Front Kick PNL. 4PSG
17	1	780-2211-10	Front Seat Back Crew Cab
18	1	780-2010-10	Front Firewall-Large UTV-Black
19	1	780-2039-00	Dash-Large UTV
20	8	630-2050-00	M5-.8 x 10 Pan Phil M/S Zinc
21	23	618-2038-50	1/4-20 X1-1/2" BH Socket Scr Blk
22	5	613-9001-00	1/4-20 Hex Flange Nuts Zinc W/Serrations
23	1	726-3242-60	Firewall Mount Brkt
24	1	786-2020-00	Speedometer/Display Gauge
25	1	777-1000-00	Ignition Switch
26	1	677-2075-00	12 Volt Auxilliary Plug
27	1	786-2038-00	4WD Switch
28	1	786-2034-00	Head Light Hi/off/Low Beam Sw.
29	1	786-2030-00	Differential Lock Switch
30	1	786-2036-00	Dump Bed Up/Down Switch
31	1	786-2040-00	Panel Plug-Eaton Blank Switch
32	1	739-3374-00	Upper Radiator Mounting Brkt
33	2	618-2069-00	3/8" - 16 X 2-1/2" Hex Hd Cap Screw
34	2	613-5041-00	3/8-16 Nylon Insert Locknut
35	6	729-1002-00	Buttom Bumper-Tailgate-2500
36	1	780-2014-10	Right Rear Lower Kick Panel, Crew Cab
37	1	786-2013-00	Wiring Harness-Diesel Truck & Crew
38	15	619-0023-00	5/16 flat Washer 18-8 SS
39	5	618-8064-50	1/4-20 x 5/8 Button Socket C/S
40	54	618-6065-00	AUEVCO P/N 17216 HOLE PLUG BLACK
41	1	780-2020-20	Center Seat Panel-Large UTV-Gr
42	1	780-2021-80	Center Seat Panel-2500-Camo
43	1	780-2020-40	Center Seat Panel-2500-Charco
44	1	780-2000-20	Hood-OD Green
45	1	780-2000-80	Hood-Camo
46	1	780-2000-40	Hood-Matallic Black
47	1	780-2061-10	Base Front Grill
48	1	780-2040-00	Glovebox
49	4	729-1006-00	Seat Pin Frame Guard-3x3.125"
50	1	736-2000-00	Shift Lever Boot-Large UTV
51	1	736-2002-00	Break Pedal Boot-Lg UTV
52	4	714-1004-00	1-1/4"x1-1/4" Black Tube Plug
53	1	793-3212-00	Hitch Pin
54	17	613-8073-00	1/4-20 Nylon Insert Locknut Zinc Orange Nylon
55	1	786-2024-00	Indicator Light

Crew Cab Diesel
CVT Assembly

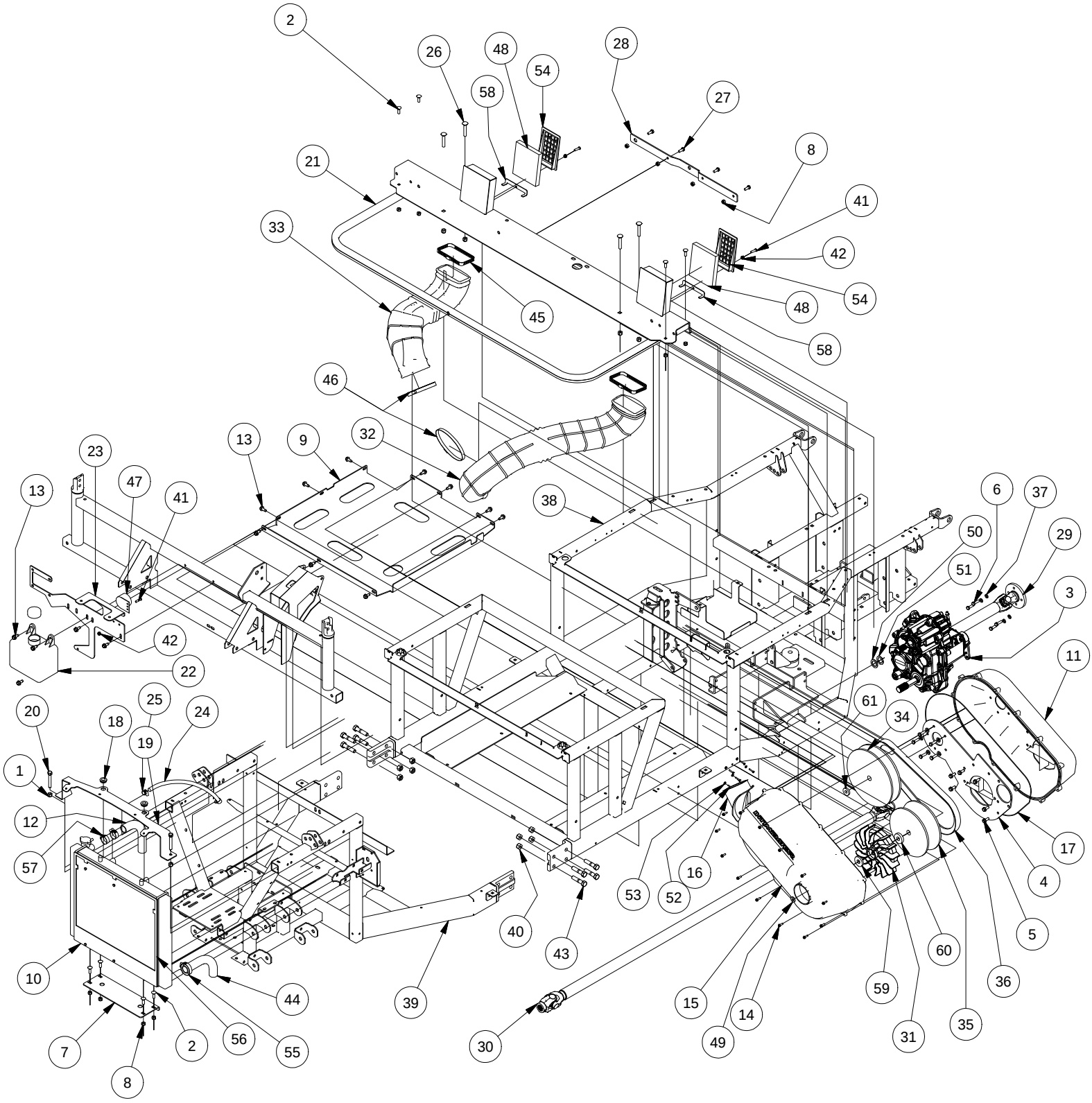

Parts List			
ITEM	QTY	PART NUMBER	DESCRIPTION
1	6	613-5041-00	3/8-16 Nylon Insert Locknut
2	8	618-8065-00	5/16-18 x 1 Carriage Bolt
3	1	737-3000-00	Transmission
4	1	726-3240-00	Diesel/CVT Plate
5	6	618-6073-00	M8x1.25x20mm Hex Washer Hd MS
6	9	618-1080-00	5/16-18 x 1" GR 8 Hex bolt
7	1	739-3337-00	Lower Radiator Mounting Brkt
8	12	613-8047-00	5/16-18 Nylock HEX Nut
9	1	793-1002-00	Intimidator Diesel Skid Plate
10	1	761-2006-00	RadiatorAssy-Large MTV
11	1	714-3002-00	CVT Enclosure Rear-Diesel
12	1	751-3006-00	Coolant Hose Passenger Side, Crew/Truck Series
13	15	618-2021-00	5/16" - 18 3/4" Ind Hex Washr Hd - Type F
14	13	718-3000-00	CVT Enclosure Bolt
15	1	714-3000-00	CVT Enclosure Front Cover
16	1	714-3004-00	CVT Enclosure Outlet Nozzle
17	1	712-3012-00	CVT Gasket
18	4	719-5000-00	Radiator Grommets
19	1	739-3374-00	Upper Radiator Mounting Brkt
20	2	618-2069-00	3/8" - 16 X 2-1/2" Hex Hd Cap Screw
21	1	770-3006-00	Diesel Seat Frame
22	1	767-2006-00	Radiator Overflow Bottle-2500
23	1	739-2057-00	Upper Hood Support Brkt-Diesel-Weber
24	1	751-1013-00	1.5 ft. 5/16" Hose - High Temp
25	2	672-8067-00	Hose Clamp No. 4 - 7/32 - 5/8
26	4	618-2023-00	3/8"-16 x 2-1/4" Carriage Bolt
27	4	618-8063-00	5/16-18 x 3/4 GR 5 Hex bolt Zinc
28	1	739-3409-00	Rotary Latch Bracket-Frame (Base Model Only)
29	1	737-2026-00	Rear Drive Shaft Lg UTV-Diesel
30	1	737-2031-00	750 EFI/ Diesel Ext Bed TRK Series
31	1	770-1020-00	CVT Clutch Fan
32	1	751-1022-00	CVT Inlet Hose-Diesel
33	1	751-1024-00	CVT Outlet Hose-Diesel
34	1	770-1004-00	CVT Driven Pulley-Diesel
35	1	770-1002-00	CVT Driver Pulley-Diesel
36	1	741-1002-00	CVT Belt-Diesel
37	4	619-8051-00	5/16 Lockwasher Zinc
38	1	770-3012-00	Crew Cab Rear Frame Assy-Diesel
39	1	770-3011-00	Front Frame-Truck/Crew Cab
40	8	613-6037-00	1/2-13 Nylon Insert Locknut
41	3	618-2037-50	1/4-20 X1 Button Socket C/S Black
42	3	613-8073-50	1/4-20 Nylon Insert Locknut BL
43	8	618-6066-00	1/2"-13x2-1/4 Gr8 Hex Cap Scr
44	1	751-3007-00	Coolant Hose Drivers Side, Crew/Truck Series
45	2	772-2014-00	CVT Plenum Hose Clamp
46	2	772-2016-00	CVT Enclousre Hose Clamp
47	1	786-2060-00	Piezeoelectric Buzzer
48	2	763-2100-00	CVT Plenum Filter Media
49	1	619-0061-00	.406" ID x .834" Nord-Loack Washer, CVT Clutch
50	1	725-1001-00	.12 CVT Shim
51	1	725-1002-00	.080 CVT Shim
52	5	618-2114-00	6/32 x 3/4 Pan Head Hex Head Machine Screw
53	5	613-0006-00	6-32 Hex Nut
54	2	780-2100-00	CVT Plenum Bezel
55	1	772-2018-00	ABA 32-44mm x 12mm Wide Hose Clamp
56	1	785-1000-00	Anitfreeze-Premix 1.5 gallons
57	2	772-2017-00	ABA 22-32mm x 12mm Wide Hose Clamp
58	2	739-3420-00	CVT Enclosure Bracket
59	1	770-1022-00	CVT Fan Inside Spacer Washer
60	1	770-1023-00	CVT Centrifugal Fan Spacer Washer
61	1	770-1024-00	CVT Secondary Spacer Washer

Kohler Diesel Engine

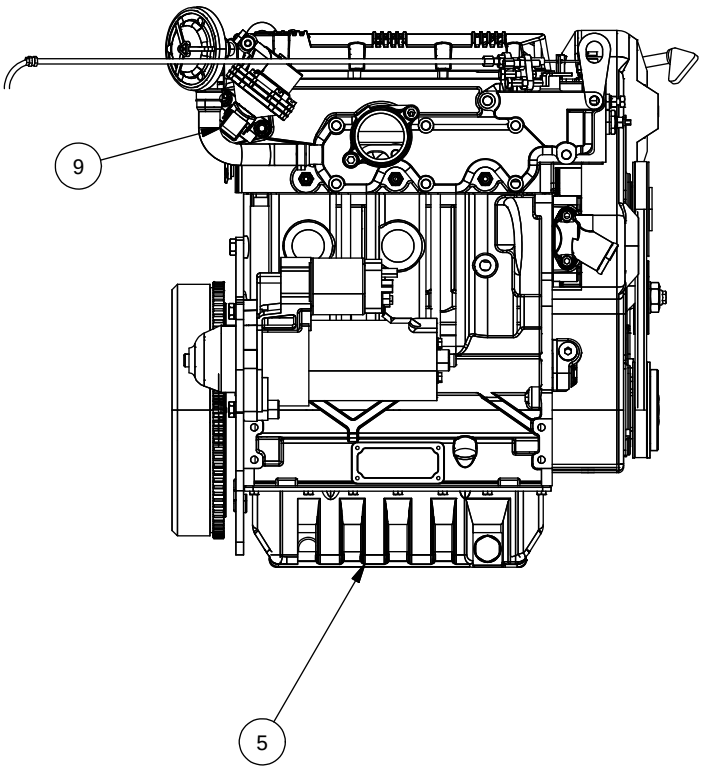

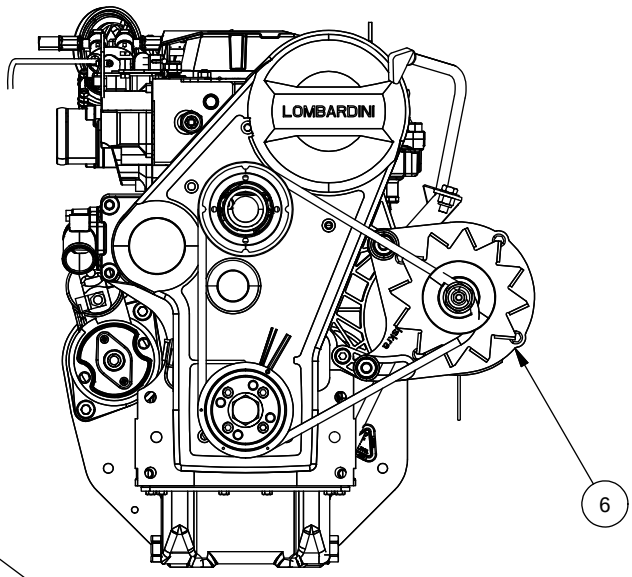

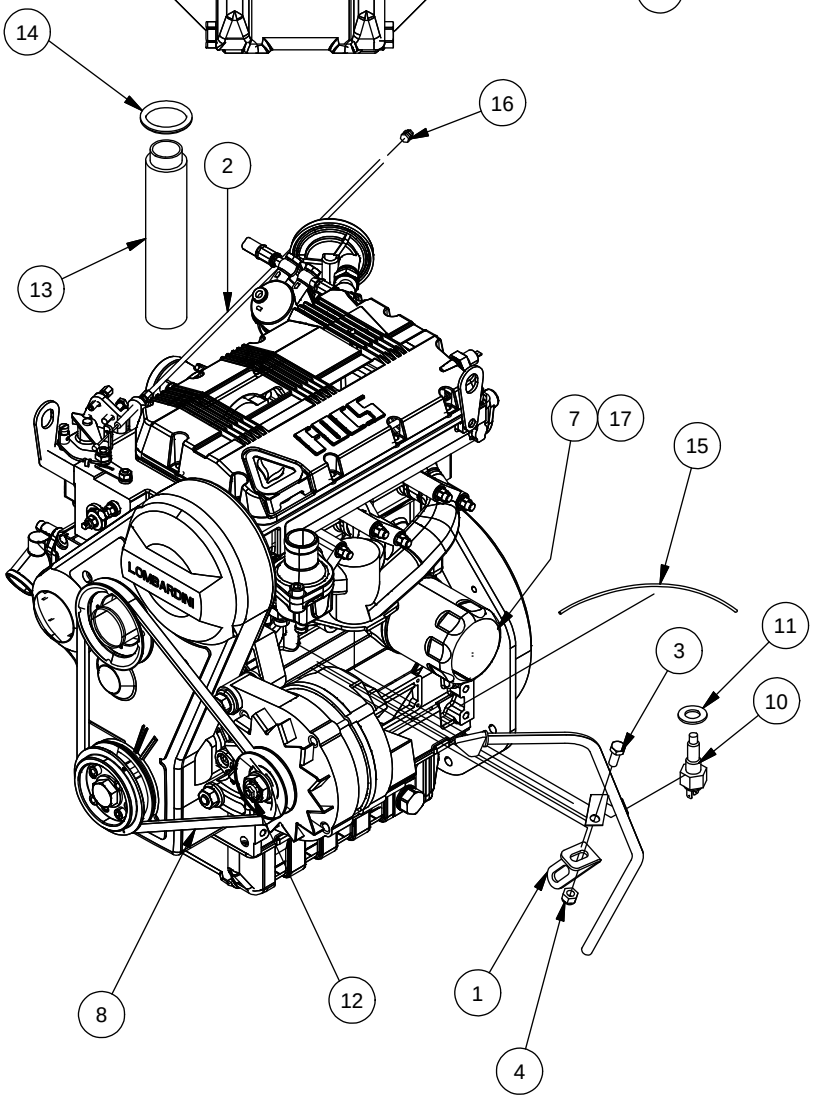

Parts List			
ITEM	QTY	PART NUMBER	DESCRIPTION
1	1	739-3410-00	Diesel Engine Dipstick Brkt
2	1	764-2002-00	Throttle Cable-Kohler Diesel
3	1	618-8063-00	5/16-18 x 3/4 GR 5 Hex bolt Zinc
4	1	613-8047-00	5/16-18 Nylock HEX Nut
5	1	715-3000-00	Diesel Engine Package
6	1	715-3131-00	Alternator
7	1	715-3102-00	Oil Filter
8	1	715-3133-00	Belt
9	1	715-3114-00	Fuel Lift Pump
10	1	786-2006-00	Temperature Water Sender-Lg UTV
11	1	712-3004-00	Diesel Temp Sd/Sw Crush Washer
12	1	613-0062-00	M6-1.0 Hex Flange Nut w/ Serrations
13	1	724-2002-00	Diesel Oil Fill Adapter
14	1	719-5002-00	Diesel Oil Fill Grommet
15	1	786-1015-00	16 AWG Insulated Standard Copper Wire
16	1	764-2005-00	Cable Stop Assembly
17	1	785-1030-00	10W 30 Motor Oil 1.5 quarts

Diesel Engine Assembly-1

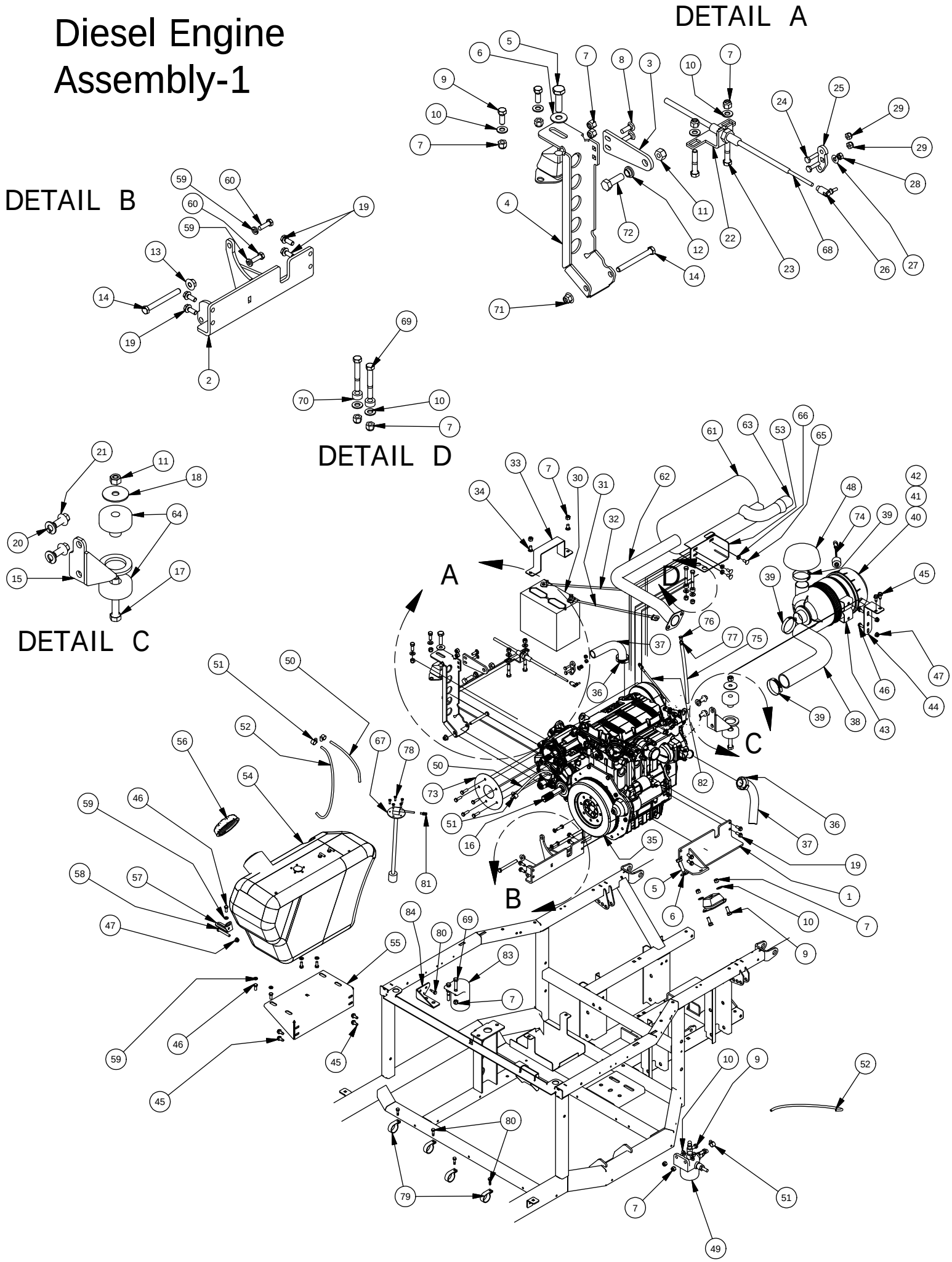

Diesel Engine Assembly-1			
ITEM	QTY	PART NUMBER	DESCRIPTION
1	1	739-2074-00	Left Diesel Engine Arm Assy
2	1	739-2076-00	Diesel/Transmission Bracket/Assy
3	1	739-3390-60	Upper Transmission Mount Tab
4	1	739-3378-00	Team Trans Right Mounting
5	2	618-2084-00	M12 X 1.75 X 45MM Hex Tap Bolt
6	2	619-5010-00	.565 IDx 1.25 ODx 0.95 Washer
7	16	613-5041-00	3/8-16 Nylon Insert Locknut
8	2	618-8065-00	5/16-18 x 1 Carriage Bolt
9	6	618-6049-00	3/8-16 X 1 GR 5 Hex Bolts Zinc
10	10	619-0057-50	3/8 Flat Washer Black Zinc
11	2	613-6037-00	1/2-13 Nylon Insert Locknut
12	1	732-2004-00	Bushing, Oil Impregnated 1/2" ID
13	1	613-5201-00	3/8-16 Serrated Flange Nut
14	2	618-2025-00	3/8" -16 X 3-1/2" hex C/S-Gr5
15	1	739-4006-00	Diesel Rear Motor Arm Assembly
16	1	737-3000-00	Transmission
17	1	618-2006-00	1/2" - 13X3-1/2" Hex Bolt Gr 5
18	1	619-0060-00	1/2 Washer Zinc
19	8	618-6073-00	M8x1.25x20mm Hex Washer Hd MS
20	2	619-5007-00	1/2 Lock Washer Zinc
21	2	618-2086-00	M12x1.75x25mm Hex Tap Bolt
22	1	739-3366-60	Lower Shift Cable Bracket
23	2	618-2024-00	3/8 -16 X 2" Hex Bolt
24	2	618-4007-00	1/4-20 x 1 Grade 5 Hex bolts Zinc
25	1	739-3376-60	Team Trans Shift Lever Ext
26	1	710-1038-00	1/4" X 28 Quick Disc. Rod End
27	1	619-4008-00	1/4 Lock Washer Zinc
28	1	613-0028-00	1/4-28 Hex Nut
29	2	613-8073-00	1/4-20 Nylon Insert Locknut Zinc Orange Nylon
30	1	768-1002-00	12 Volt Battery-Diesel
31	1	764-2500-00	Positive Battery Cable 4Ga.
32	1	764-2502-00	Negative Battery Cable, 4Ga.
33	1	757-3002-00	Diesel Batt Strap
34	2	618-2068-00	3/8 x 3/4" GR 8 Carr Bolts Zinc
35	1	715-3000-00	Diesel Engine Package
36	2	772-2018-00	ABA 32-44mm x 12mm Wide Hose Clamp
37	2	751-3000-00	Coolant Hose 1" ID X 1.25 OD
38	1	736-2005-00	Intake Adapter Hose-Diesel
39	3	672-9052-00	1-9/16 to 2-1/2 Hose Clamp
40	1	763-1001-00	Air Filter
41	1	763-1002-00	Air Box Cap
42	1	763-3000-00	Air Box Assembly
43	1	772-1100-00	Air Canister Clamp
44	1	739-3370-00	Air Filter Bracket
45	6	618-2021-00	5/16" - 18 3/4" Ind Hex Washr Hd - Type F
46	7	618-8063-00	5/16-18 x 3/4 GR 5 Hex bolt Zinc
47	3	613-8049-00	5/16-18 Nylon Insert Flange Nut Zinc Orange Nylon
48	1	763-2012-00	Rain Cap- Air Filter
49	1	ED0021752880-S	Diesel Engine Fuel Filter
50	1	751-1014-00	8 ft.-1/4 Fuel Line - Low Perm
51	5	672-8067-00	Hose Clamp No. 4 - 7/32 - 5/8
52	1	751-1016-00	8 ft.-3/16" Hose
53	1	739-2064-00	Muffler Mount Bracket
54	1	767-2001-00	Fuel Tank-Diesel Engine
55	1	739-2058-00	Lower Fuel Tank Support Brkt
56	1	767-2004-00	Fuel Tank Cap-Lg UTV-Diesel
57	1	739-2059-60	Upper Fuel Tank Support Brkt
58	1	618-2034-00	5/16" x 2-1/4" Hex Hd Cap Scr.
59	7	619-8051-00	5/16 Lockwasher Zinc
60	7	618-1080-00	5/16-18 x 1" GR 8 Hex bolt
61	1	715-3012-00	Muffler-Kohler 25 EFI & Diesel
62	1	715-3014-00	Exhaust Mainfold-Diesel-Black
63	1	715-3016-00	Spark Arrestor Kit For Muffler
64	1	732-1014-00	Engine Vibration Mount
65	3	618-8062-50	5/16-18x3/4 Carriage Bolts Black Zinc
66	3	613-9002-00	5/16-18 Hex Flange Nuts Zinc w/Serations
67	1	786-2004-00	Fuel Sender
68	1	764-2004-00	Gear shift Cable-Large UTV
69	4	618-2078-00	3/8-16 X 2-3/4 Hex C/S GR 2 zinc
70	2	725-3208-00	.75ODx.4IDx.375"L Spacer
71	1	613-5202-00	3/8-16 Nylock Flange Nut
72	1	630-7044-00	1/2-13x 1.2" Hex Tap Bolt
73	1	726-3254-00	Diesel Transmission Washer
74	1	763-3006-00	Filter Restriction Switch
75	1	751-1018-00	5/16 ID 7/16 OD Hose
76	1	724-1045-00	Breather Plug Threaded
77	1	772-1001-00	5/16 Spring Hose Clamp
78	5	618-2105-00	10-32 x 5/8" Indented hex Head machine Screw
79	4	672-9050-00	3/4 EPDM Cushion Clamp
80	5	630-7040-00	1/4 x 1 Hex Head Tek Screw
81	1	613-0008-00	Male Push on Terminal
82	1	664-0040-00	14" Battery Cable 2 Gauge
83	1	ED161434-s	Remote Oil Filter Kit
84	1	739-2303-00	Diesel Remote Oil Filter Bracket

Rear Suspension Assembly

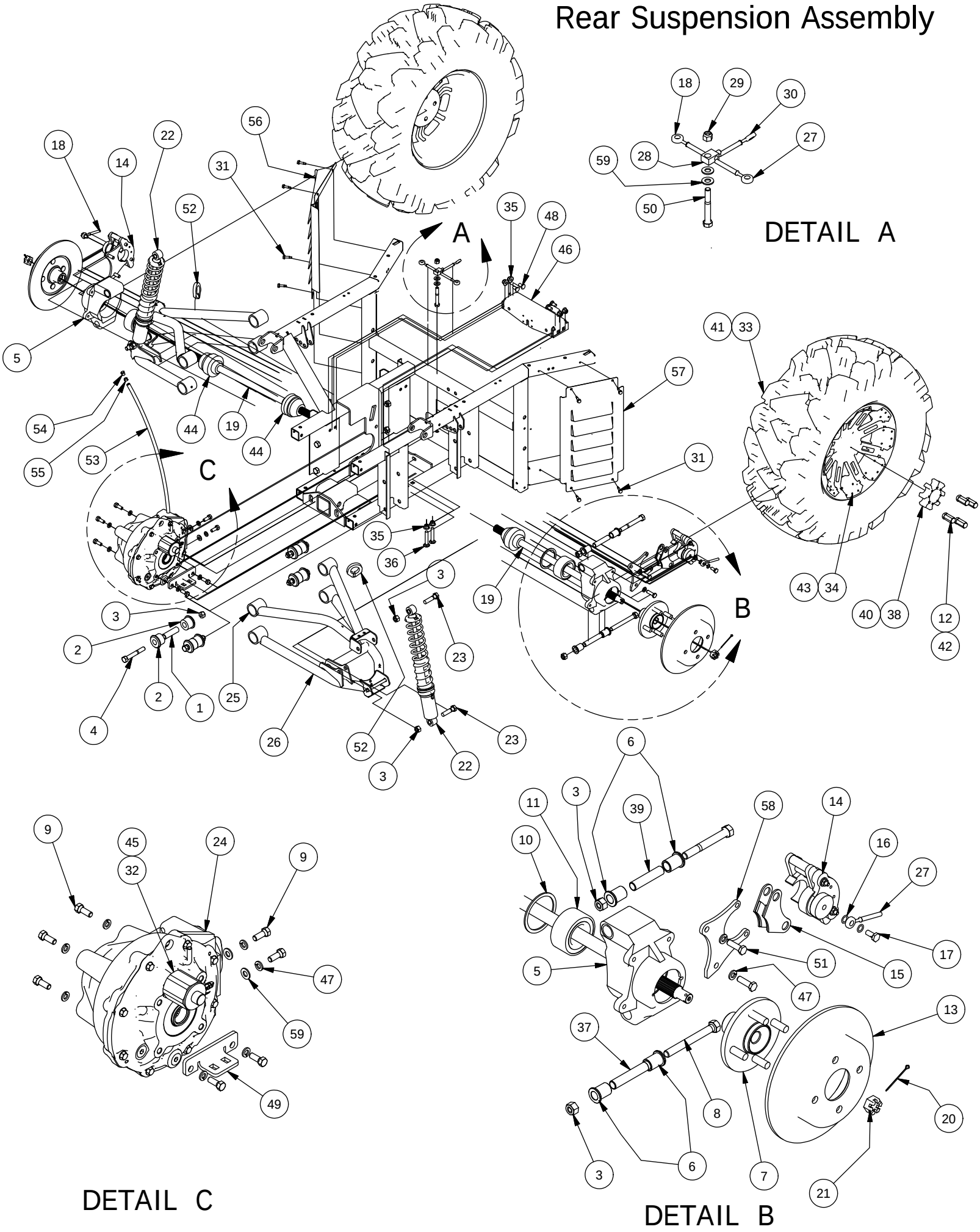

Rear Suspesion Assembly			
ITEM	QTY	PART NUMBER	DESCRIPTION
1	8	732-2001-00	Large MTV A-Arm Bushing Sleeve
2	16	732-2000-00	Large MTV A-Arm Bushing
3	16	613-6037-00	1/2-13 Nylon Insert Locknut
4	8	618-2006-00	1/2" - 13X3-1/2" Hex Bolt Gr 5
5	2	770-1040-00	Independent Rear Suspension
6	8	710-2000-00	Flange BUSHING-Large UTV
7	2	786-2000-00	Hub-Large UTV
8	2	618-2030-00	1/2" -13 x 4.5" Hex Cap Screw
9	7	618-6049-00	3/8-16 X 1 GR 5 Hex Bolts Zinc
10	2	710-2003-00	Retaining Ring-Spindle Bearing
11	2	710-2002-00	Spindle Bearing LRG UTV
12	8	613-0001-00	XD4 Lug Nut
13	2	716-2000-00	Rotor - Large UTV
14	2	616-1051-00	Hydraulic Caliper
15	2	616-1056-00	Brake Pad Kit (2 Pads per Kit)
16	4	616-1025-00	10 mm copper crush washer
17	2	616-1015-00	Banjo Bolt M 10mm x 1.0
18	1	716-3008-00	Brake Line Left Rear-Lg UTV
19	2	737-2034-00	Half-Shaft - Rear Large UTV
20	2	765-1016-00	Rear Hub Castle Nut Cotter Pin
21	2	765-1012-00	Rear Hub Castle Nut
22	2	787-2010-00	Rear Shock-Lg. UTV-Gas & Diesel
23	4	618-5049-00	1/2-13 x 2 GR5 Hex Bolt Zinc
24	1	737-3005-00	Rear Differential, Large MTV
25	1	787-3211-00	Extended Right Rear Upper A-arm assy
26	1	787-3213-00	Extended Right Rear Lower A-Arm Assy
27	1	716-3006-00	Brake Line Right Rear-Lg UTV
28	1	716-3010-00	Brake Line Tee-Rear-Lg UTV
29	1	613-5041-00	3/8-16 Nylon Insert Locknut
30	1	716-3004-00	Brake Line-MC to Rear T-Lg UTV
31	8	630-7040-00	1/4 x 1 Hex Head Tek Screw
32	1	737-3006-00	Rear Diff Lock Solenoid
33	2	722-4100-00	XD4 Rear Tire
34	2	722-4002-00	XD4 Rear Wheel
35	6	613-5202-00	3/8-16 Nylock Flange Nut
36	2	618-2023-00	3/8"-16 x 2-1/4" Carriage Bolt
37	2	725-3026-00	IRS Lower Spacer
38	2	722-4004-00	XD4 Wheel Center Cap
39	2	725-3025-00	IRS Upper Spacer
40	2	722-4110-00	Base Wheel Center Cap
41	2	722-4113-00	Base Rear Tire
42	8	713-1012-50	Open End Lug Nut-Black (Base Model Only)
43	2	722-4007-00	Base Rear Wheel
44	4	712-3222-00	Half Shaft CV Boot Kit
45	1	737-3007-00	Rear Diff Lock Solenoid Spring
46	1	739-3380-00	Rear Diff Cage Top Brace
47	11	619-5037-00	3/8 Lockwasher Zinc
48	4	618-2068-00	3/8 x 3/4" GR 8 Carr Bolts Zinc
49	1	739-3328-60	Right Rear Differential Mount
50	1	618-2078-00	3/8-16 X 2-3/4 Hex C/S GR 2 Zinc
51	4	618-5040-00	3/8-16 x 1-1/4 Hex Bolt GR5
52	2	772-2050-00	Break Line Anchor-1-1/4"
53	1	751-1018-00	5/16 ID 7/16 OD Hose
54	1	724-1045-00	Breather Plug Threaded
55	1	772-1001-00	5/16 Spring Hose Clamp
56	1	726-3259-00	Left Lowered Rear Fender Well
57	1	726-3260-00	Right Lowered Rear Fender Well
58	2	639-0054-00	Brake Caliper Brkt-Ausco-Elect
59	4	619-0057-50	3/8 Flat Washer Black Zinc

Crew Cab Roll Cage Assembly

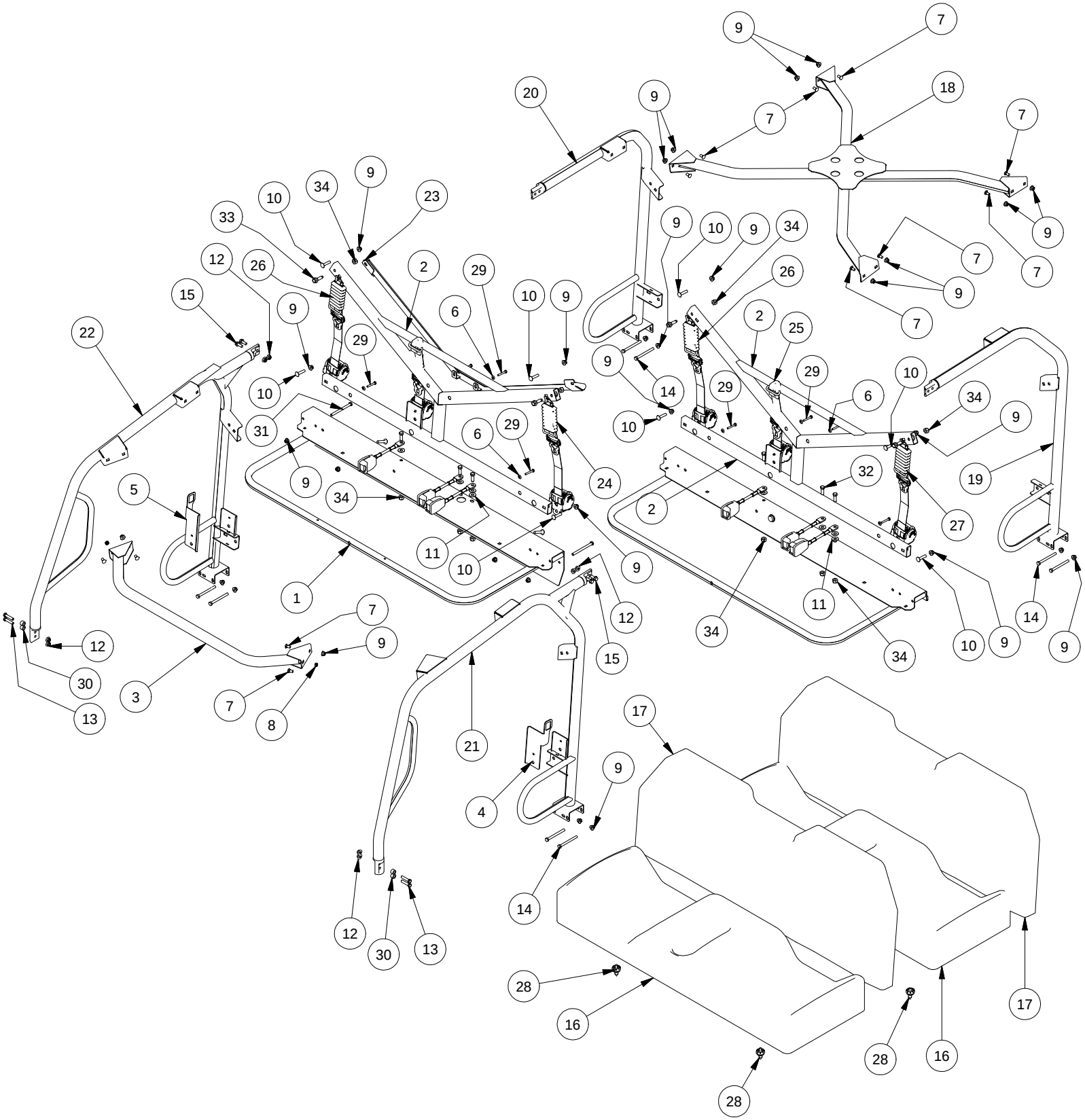

Parts List			
ITEM	QTY	PART NUMBER	DESCRIPTION
1	1	770-3306-00	Front Seat Frame Assembly Crew Cab
2	2	780-3002-00	ROPS K Brace Assy For Seat Back w/ Integral Headrest
3	1	703-3318-00	ROPS Front Cross Brace
4	1	739-4498-00	Crew Cab Rear Side Net Latch Bracket left
5	1	739-4499-00	Crew Cab Rear Side Net Latch Bracket Right
6	8	619-4008-00	1/4 Lock Washer Zinc
7	12	618-2068-00	3/8 x 3/4" GR 8 Carr Bolts Zinc
8	2	613-2004-00	3/8"-16 Nyloc Jam Nut
9	30	613-5202-00	3/8-16 Nylock Flange Nut
10	10	618-2048-00	3/8-16 x 1-3/4 Carriage Bolt
11	8	619-8052-00	7/16 USS Flat Washer Zinc
12	8	613-5201-00	3/8-16 Serrated Flange Nut
13	4	618-2008-00	3/8"-16X1-3/4" Gr 8 C/S
14	8	618-1081-00	3/8" -16 x4 Gr.8 Hex bolt Cs
15	4	618-6055-50	3/8 - 16 X 1 Flange Bolt BLK Gr.8
16	2	771-2002-00	Seat Bottom-Large UTV
17	2	771-2001-00	Seat Back-Large UTV
18	1	780-3022-00	ROPS X-Brace Assembly Crew Cab
19	1	780-3014-00	ROPS Left Rear Hoop Assy Crew Cab
20	1	780-3016-00	ROPS Right Rear Hoop Assy Crew Cab
21	1	780-3018-00	ROPS Left Front Hoop Assy Crew Cab
22	1	780-3020-00	ROPS Right Front Hoop Assy Crew Cab
23	1	770-3310-00	Crew Cab Rear Handhold Assy
24	1	771-1017-00	Seat Belt Assy-3 Point-Front Drivers Side
25	2	771-1016-00	Seat Belt Assy-3 Point-Center
26	2	771-1015-00	Seat Belt Assy-3 Point-Passangers Side
27	1	771-1014-00	Seat Belt Assy-3 Point-Rear Drivers Side
28	4	739-2300-00	Seat Pin Latch Assembly
29	8	618-2016-50	1/4-20 x 1-3/4" Hex Bolt
30	4	725-4005-00	Spacer, .75 O.D. x .400 I.D. x .500"L
31	2	618-2104-00	3/8-16 x 4-1/2 Hex Cap Screw GR 8
32	6	618-2097-00	7/16-20 x 1-1/4 GR5 Hex Cap Screw
33	4	618-2096-00	7/16-20 x 1 3/8 GR5 Shoulder Bolt
34	10	613-0026-00	7/16-20 Nylon Insert Locknut

Crew Cab
Safety Nets Assemblies

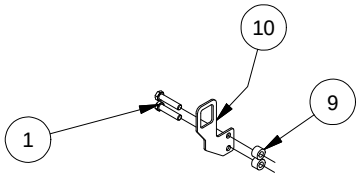

DETAIL B

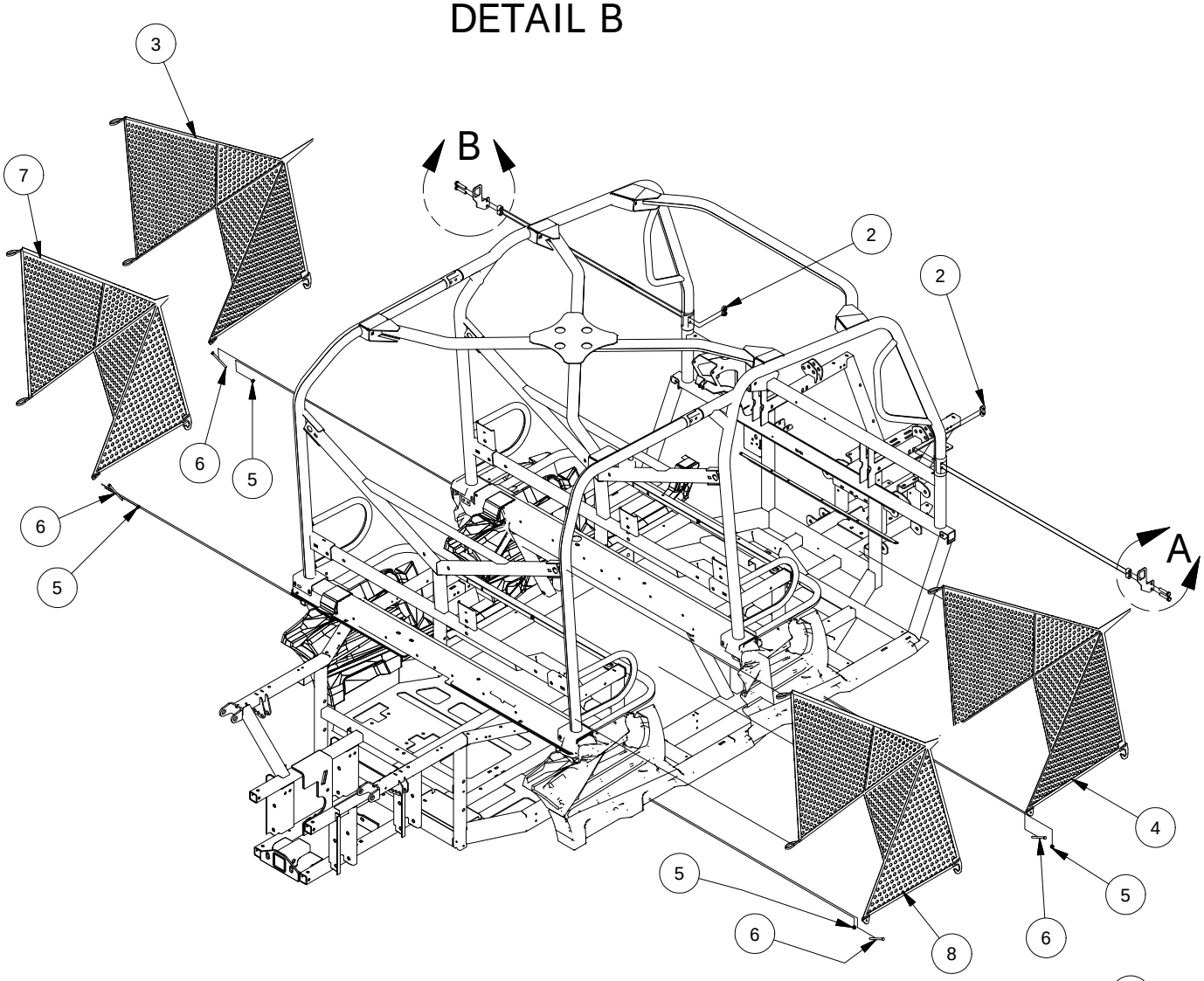

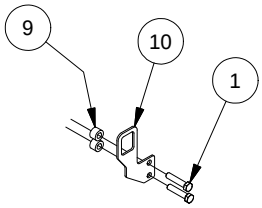

DETAIL A

Parts List			
ITEM	QTY	PART NUMBER	DESCRIPTION
1	4	618-2008-00	3/8"-16X1-3/4" Gr 8 C/S
2	4	613-5201-00	3/8-16 Serrated Flange Nut
3	1	771-1010-00	Side Net - Left Side
4	1	771-1011-00	Side Net - Right Side
5	8	613-8073-50	1/4-20 Nylon Insert Locknut BL
6	4	618-1055-50	1/4-20 X3" (GRS) Carriage Bolt
7	1	771-1012-00	Rear Side Net - Left Side Intimidator
8	1	771-1013-00	Rear Side Net - Right Side Intimidator
9	4	725-4005-00	Spacer, .75 O.D. x .400 I.D. x .500"L
10	2	739-4069-00	Front side net female buckle Mounting Brkt 2017

Bed Assembly 1

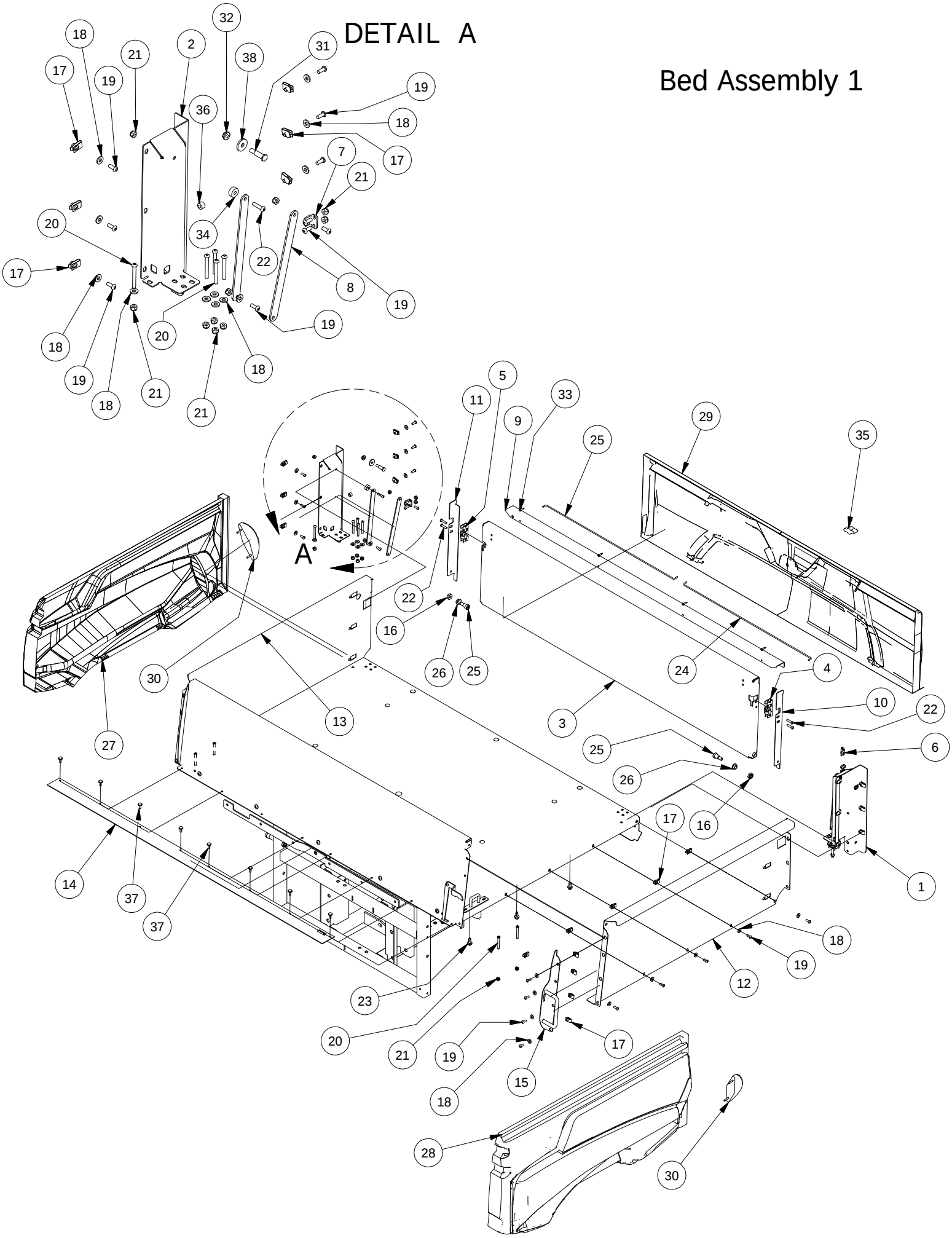

Bed Assembly 1			
ITEM	QTY	PART NUMBER	DESCRIPTION
1	1	703-4008-10	Bed Side Support-Left
2	1	703-4006-10	Bed Side Support-Right
3	1	726-4008-10	Standard Bed Tailgate
4	1	752-1008-00	Tailgate Rotary Latch-Left
5	1	752-1010-00	Tailgate Rotary Latch-Right
6	1	739-4004-60	Tailgate Support Bracket (Left)
7	1	739-4002-60	Tailgate Support Bracket (Right)
8	4	739-4016-60	Tailgate Support Arm-2500
9	1	703-4002-20	Top Tailgate Guard
10	1	703-4014-20	Left TG Side Cover
11	1	703-4012-20	Right TG Side Cover
12	1	726-4004-20	Standard Bed Left Side
13	1	726-4006-20	Standard Bed Right Side
14	1	712-3020-00	Bed Dust Seal
15	1	769-4002-00	Dump Bed Handle Assy
16	6	613-0040-00	1/2-13 Nylon Insert Jam Locknut
17	34	613-0054-00	1/4-20 Cage Nut
18	47	619-0010-50	1/4 Flat Washer Black
19	43	618-8064-50	1/4-20 x 5/8 Button Socket C/S
20	14	618-1060-50	1/4-20 X2" Button Hd Black
21	25	613-8073-50	1/4-20 Nylon Insert Locknut BL
22	7	618-2037-50	1/4-20 X1 Button Socket C/S Black
23	6	618-2021-00	5/16" - 18 3/4" Ind Hex Washr Hd - Type F
24	2	735-4000-00	Tailgate Latch Push Rod Left
25	2	618-6062-00	1/2" x 5/8" Soc. Shoulder Bolt
26	2	632-5000-00	1/2 IDx 5/8 x 5/16 OIB Bushing
27	1	780-2065-10	Dump Bed Side-Right-Large UTV
28	1	780-2070-10	Dump Bed Side-Left-Large UTV
29	1	780-2075-10	Tailgate-Large UTV-Black
30	2	786-0014-00	Stop/Tail Light - Large UTV
31	2	739-7000-00	Basket Latch Striker Post
32	2	613-0031-00	Serrated Flange nut
33	4	630-2030-50	10 x 3/4 Pan Philips Tek Screw
34	3	725-4004-00	Spacer, .261 IDx.740 ODx.315 L
35	1	752-1006-00	Dump Bed Tail gate Actuator
36	2	729-1002-00	Buttom Bumper-Tailgate-2500
37	8	618-2082-00	Push Pin Rivet-Bed Seal
38	2	619-4004-00	Striker Post Fender Washer

Bed Assembly 2

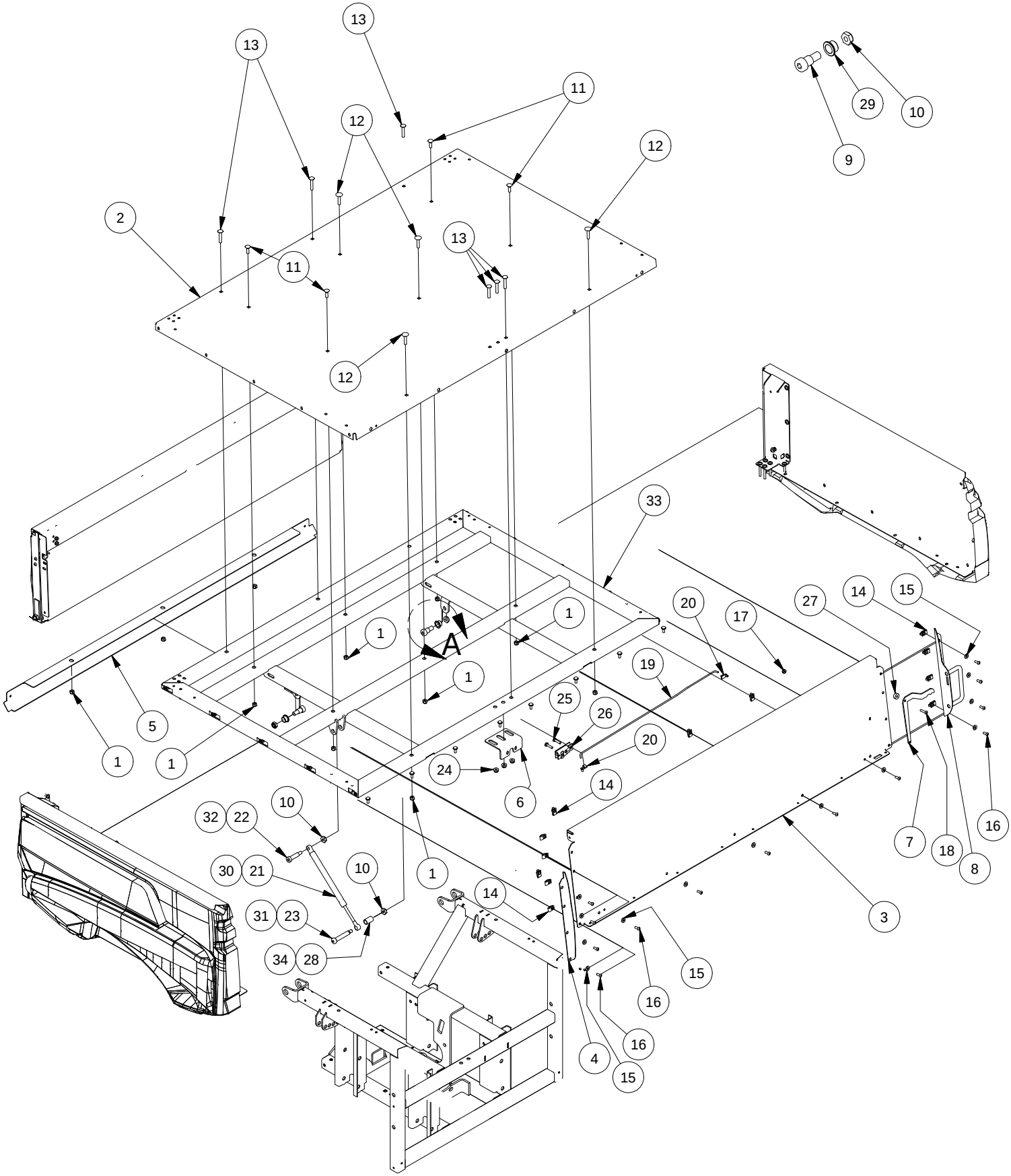

Bed Assembly 2			
ITEM	QTY	PART NUMBER	DESCRIPTION
1	11	613-8047-00	5/16-18 Nylock HEX Nut
2	1	726-4000-20	Standard Bed Bottom
3	1	726-4002-20	Standard Bed Front
4	1	703-4009-20	Right Bed Corner Cover
5	1	703-4004-20	Lower Bed Cover
6	1	739-3406-00	Rotary Latch Bracket-Bed (Base Model Only)
7	1	769-4000-00	Dump Bed Actuator Lever (Base Model Only)
8	1	769-4002-00	Dump Bed Handle Assy
9	2	618-3001-00	5/8 x 5/8 Shoulder Bolt
10	6	613-0040-00	1/2-13 Nylon Insert Jam Locknut
11	4	618-8065-00	5/16-18 x 1 Carriage Bolt
12	4	618-8060-00	5/16-16 x 1 1/2 Carriage Bolts
13	6	618-4708-00	5/16-18 x 1-3/4 Carriage bolt
14	34	613-0054-00	1/4-20 Cage Nut
15	47	619-0010-50	1/4 Flat Washer Black
16	43	618-8064-50	1/4-20 x 5/8 Button Socket C/S
17	25	613-8073-50	1/4-20 Nylon Insert Locknut BL
18	7	618-2037-50	1/4-20 X1 Button Socket C/S Black
19	1	735-4004-00	Dump Bed Latch Push Rod
20	2	772-7000-00	Latch Push Rod Retainer Clip
21	1	735-2000-00	Dump Bed Gas Spring-Large UTV
22	1	618-2020-00	12"X1-1/2" Shoulder Bolt
23	1	618-2047-00	1/2"x 2-1/2" Shoulder Bolt
24	3	613-8049-00	5/16-18 Nylon Insert Flange Nut Zinc Orange Nylon
25	2	618-4007-00	1/4-20 x 1 Grade 5 Hex bolts Zinc
26	1	752-1004-00	Dump Bed Rotary Latch
27	3	725-4004-00	Spacer, .261 IDx.740 ODx.315 L
28	1	725-1009-00	Pedal Spring Spacer LRG UTV 1-1/8 spacer
29	2	632-5052-00	Bronze Bushing - SF- 2024-8
30	1	735-2010-00	Dump Bed Actuator-2500 Series (XD4 Models Only)
31	1	618-6068-00	1/2" X 4" Shoulder Bolt (XD4 Models Only)
32	1	618-5049-00	1/2-13 X 2 GR 5 Hex Bolts Zinc (XD4 Models Only)
33	1	770-3016-00	Standard Bed Frame Assy
34	1	725-1011-00	11/16 x 1/2 x 5/8 Spacer

1000cc Left
791-2014-00 Orange
791-2014-10 Gray
791-2014-20 O.D. Green

1000cc Right
791-2015-00 Orange
791-2015-10 Gray
791-2015-20 O.D. Green

4X4 Right
791-2023-00 Orange
791-2023-10 Gray
791-2023-20 O.D. Green

Decal Warning Cluster-2500
791-2030-00

XD4 Right
791-2025-00 Orange
791-2025-10 Gray
791-2025-20 O.D. Green

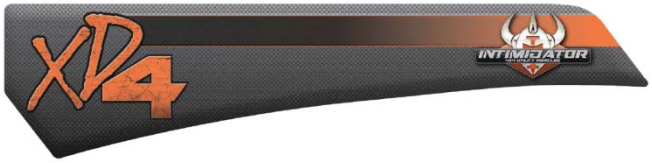

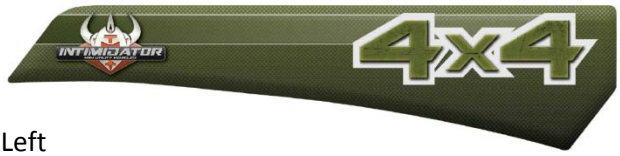

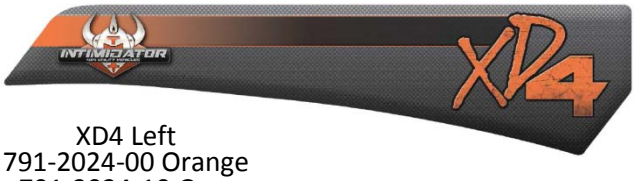

4X4 Left
791-2022-00 Orange
791-2022-10 Gray
791-2022-20 O.D. Green

XD4 Left
791-2024-00 Orange
791-2024-10 Gray
791-2024-20 O.D. Green

Dash Intimidator
791-2020-00 Orange
791-2020-10 Gray
791-2020-20 O.D. Green

Tailgate Intimidator
791-2026-00 Orange
791-2026-10 Gray
791-2026-20 O.D. Green

Muffler Hot Warning Label
791-1000-00

Load Rating Label, Crew
791-2036-00

Camo XD4 Decal
791-2098-00

Camo 4x4 Decal
791-2097-00

Helmet Logo Decal
491-2099-00

Intimidator Inc. certifies that the ROV complies with the American National Standard for Recreational Off-highway Vehicles.

ANSI/RHOVA 1-2014

RHOVA Decal
791-2120-00

INTIMIDATOR Incorporated

Serial Number: 770-3320-00
770-3321-00

Fits: All 2500 series utility vehicles.

ROPS/Vehicle Test Weight: 3300 lb.

1 Bad Boy Blvd.
Batesville, AR 72501
Intimidator, Inc.
intimidatorutv.com

Meets: ISO 3471:2808-08
ROHVA-1:2011 Sect. 10.2

IUTV-5

ROPS Decal
791-2096-00

A WARNING

Improper Use of Off-Highway Vehicles Can Cause Severe Injury or Death

Be Prepared
- Fasten seat belts.
- Wear an approved helmet and protective gear.
- Fasten nets on all positions equipped with them.
- Each rider must be able to sit with back against seat, feet flat on floor [and foot rests], and hands on steering wheel or handhold[s] [where equipped].
  Stay completely inside the vehicle.

Drive Responsibly
Avoid loss of control and rollovers:
- Avoid abrupt maneuvers, sideways sliding, skidding, or fishtailing, and never do donuts.
- Slow down before entering a turn.
- Avoid hard acceleration when turning, even from a stop.
- Plan for hills, rough terrain, ruts, and other changes in traction and terrain. Avoid paved surfaces.
- Avoid side hilling (riding across slopes).

Rollovers have caused severe injuries and death, even on flat, open areas.

Be Sure Riders Pay Attention and Plan Ahead
If you think or feel the vehicle may tip or roll, reduce your risk to injury:
- Keep a firm grip on the steering wheel or handholds and brace yourself.
- Do not put any part of your body outside of the vehicle for any reason.

Require Proper Use of Your Vehicle
Do your part to prevent injuries:
- Do not allow careless or reckless driving.
- Make sure operators are 16 or older with a valid driver's license.
- Do not let people drive or ride after using alcohol or drugs.
- Do not allow operation on public roads (unless designated for off-highway vehicle access) -collisions with cars and trucks can occur.
- Do not exceed seating capacity of your vehicle.

DRIVER UNDER 16

Locate and Read Owner's Manual; Follow All Instruction and Warnings

Training Courses To Teach ROV Operation Are Available, Check With Your Dealer.

Check with your dealer regarding state and local ROV Operation Laws.

This Tag Is Only To Be Removed By The Owner After Purchase.

General Warning Tag
791-2119-00