Intimidator UTV Part Manual

800cc

www.IntimidatorUTV.com

Revision Date 1-1-17

Table of Contents

Front Suspension Assembly 3

Parts List 4

Lights and Break Assemblies 5

Parts List 6

Seat, Dash, and Grill Assemblies 7

Parts List 8

Plastic Assembly 9

Parts List 10

Radiator Assembly.....11

Parts List.....12

Engine only Assembly.....13

Engine in Frame Assembly.....14

Parts List.....15

Rear Suspension Assembly 16

Parts List 17

Roll Cage Assembly 18

Parts List.....19

Safety Net Assemblies 20

Bed Assembly (1 of 2) 21

Parts List 22

Bed Assembly (2 of 2).....23

Parts List 24

Decals.....25-26

Front Suspension Assembly

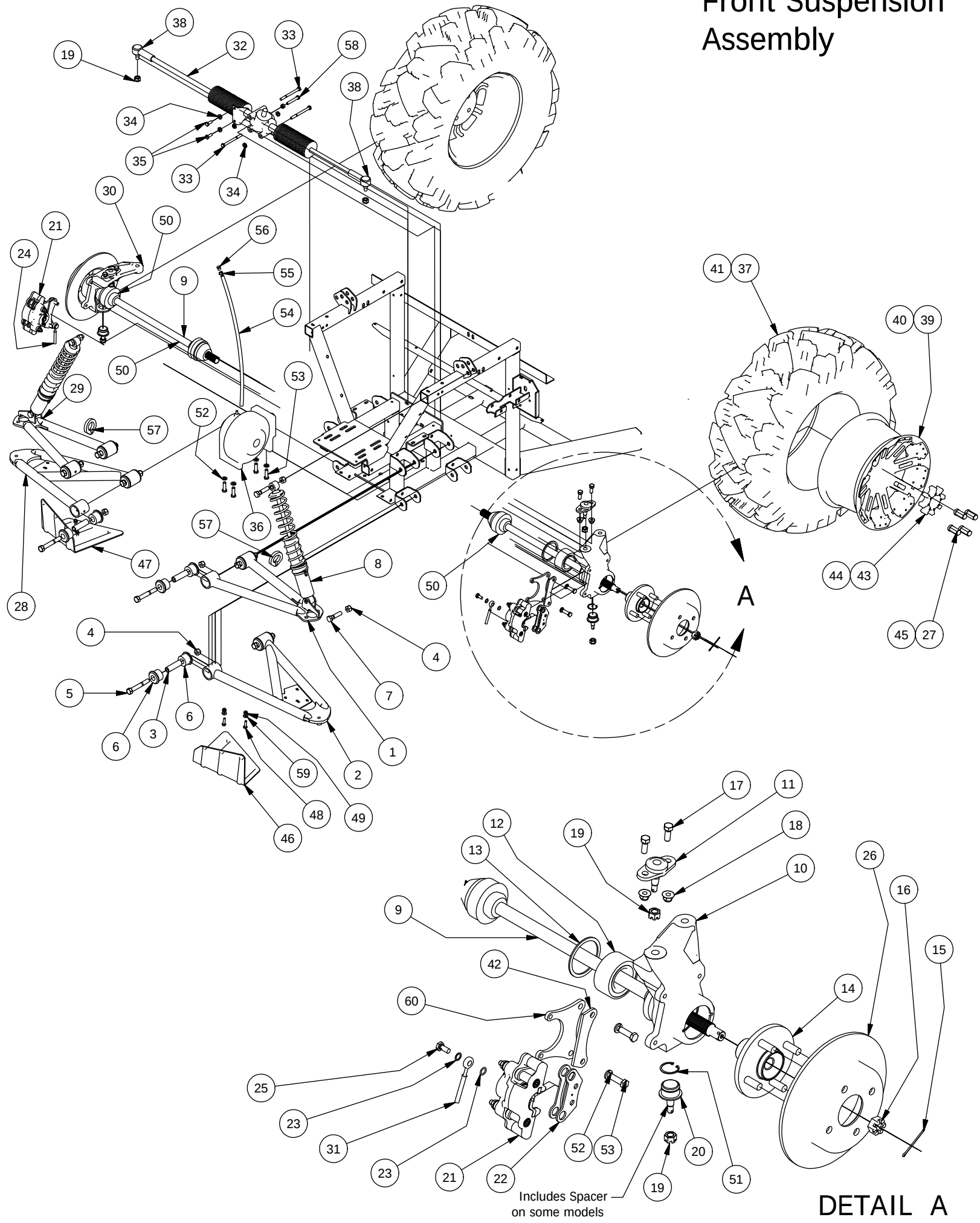

Front Suspension Assembly			
ITEM	QTY	PART NUMBER	DESCRIPTION
1	1	787-3201-00	Left Front Upper A-arm Assy
2	1	787-3203-00	Left Front Lower A-Arm Assy
3	8	732-2001-00	Large MTV A-Arm Bushing Sleeve
4	12	613-6037-00	1/2-13 Nylon Insert Locknut
5	8	618-2006-00	1/2" - 13X3-1/2" Hex Bolt Gr 5
6	16	732-2000-00	Large MTV A-Arm Bushing
7	4	618-5049-00	1/2-13 x 2 GR5 Hex Bolt Zinc
8	2	787-2005-00	Front Shock-Kohler 25 Lg UTV
9	2	737-2029-00	Half-Shaft - Front Large UTV
10	1	737-2020-00	Spindle, Left Front-Large UTV
11	2	799-2003-00	Ball Joint-Spindle-Upper High Strength
12	2	710-2002-00	Spindle Bearing LRG UTV
13	2	710-2003-00	Retaining Ring-Spindle Bearing
14	2	786-2000-00	Hub-Large UTV
15	2	765-1016-00	Rear Hub Castle Nut Cotter Pin
16	2	765-1012-00	Rear Hub Castle Nut
17	4	618-6049-00	3/8-16 X 1 GR 5 Hex Bolts Zinc
18	4	613-5202-00	3/8-16 Nylock Flange Nut
19	6	613-2003-00	M12 X 1.25 Castle Nut
20	2	799-2000-00	Ball Joint-Spindle-Lower
21	2	616-1051-00	Hydraulic Caliper
22	2	616-1056-00	Brake Pad Kit (2 Pads per Kit)
23	4	616-1025-00	10 mm copper crush washer
24	1	716-3002-00	Brake Line Front Right-Lg UTV
25	2	616-1015-00	Banjo Bolt M 10mm x 1.0
26	2	716-2000-00	Rotor - Large UTV
27	8	613-0001-00	1/2 Lug Nut-44011- Front
28	1	787-3202-00	Right Front Lower A-Arm Assy
29	1	787-3200-00	Right Front Upper A-Arm Assy
30	1	737-2022-00	Spindle, Right Front-Large UTV
31	1	716-3000-00	Brake Line Front Left-Lg UTV
32	1	731-3000-00	Rack & Pinion, Large MTV
33	3	618-2060-00	5/16-18 X 3 1/2 GR 5 Hex Bolts Zinc
34	5	613-9002-00	5/16-18 Hex Flange Nuts Zinc w/Serations
35	2	618-8063-00	5/16-18 x 3/4 GR 5 Hex bolt Zinc
36	1	756-3004-00	Front Differential-800cc
37	1	722-4102-00	XD4 Front Tire
38	2	710-1014-00	Tie Rod End-Intimidator
39	2	722-4000-00	XD4 Front Wheel
40	2	722-4006-00	Base Model Front Wheel
41	1	722-4112-00	Base Model Front Tire
42	2	725-3210-60	Caliper Brake Mount Spacer
43	2	722-4004-00	XD4 Wheel Center Cap
44	1	722-4110-00	Base Wheel Center Cap
45	8	713-1012-50	Open End Lug Nut-Black (Base Model Only)
46	1	780-2206-00	Left A Frame Guard-2500
47	1	780-2207-00	Right A Frame Guard-2500
48	4	618-4007-00	1/4-20 x 1 Grade 5 Hex bolts Zinc
49	4	613-8073-00	1/4-20 Nylon Insert Locknut Zinc Orange Nylon
50	4	712-3222-00	Half Shaft CV Boot Kit
51	2	799-2001-00	Retaining Ring-Lg MTV Ball Jt
52	8	619-5037-00	3/8 Lockwasher Zinc
53	8	618-5040-00	3/8-16 x 1-1/4 Hex Bolt GR5
54	1	751-1018-00	5/16 ID 7/16 OD Hose
55	1	772-1001-00	5/16 Spring Hose Clamp
56	1	724-1045-00	Breather Plug Threaded
57	2	772-2050-00	Break Line Anchor-1-1/4"
58	1	618-2071-00	5/16-18X 2" Hex Head Cap Screw
59	4	619-0010-50	1/4 Flat Washer Black
60	2	639-0054-00	Brake Caliper Brkt-Ausco-Elect

Lights and Brake Assemblies

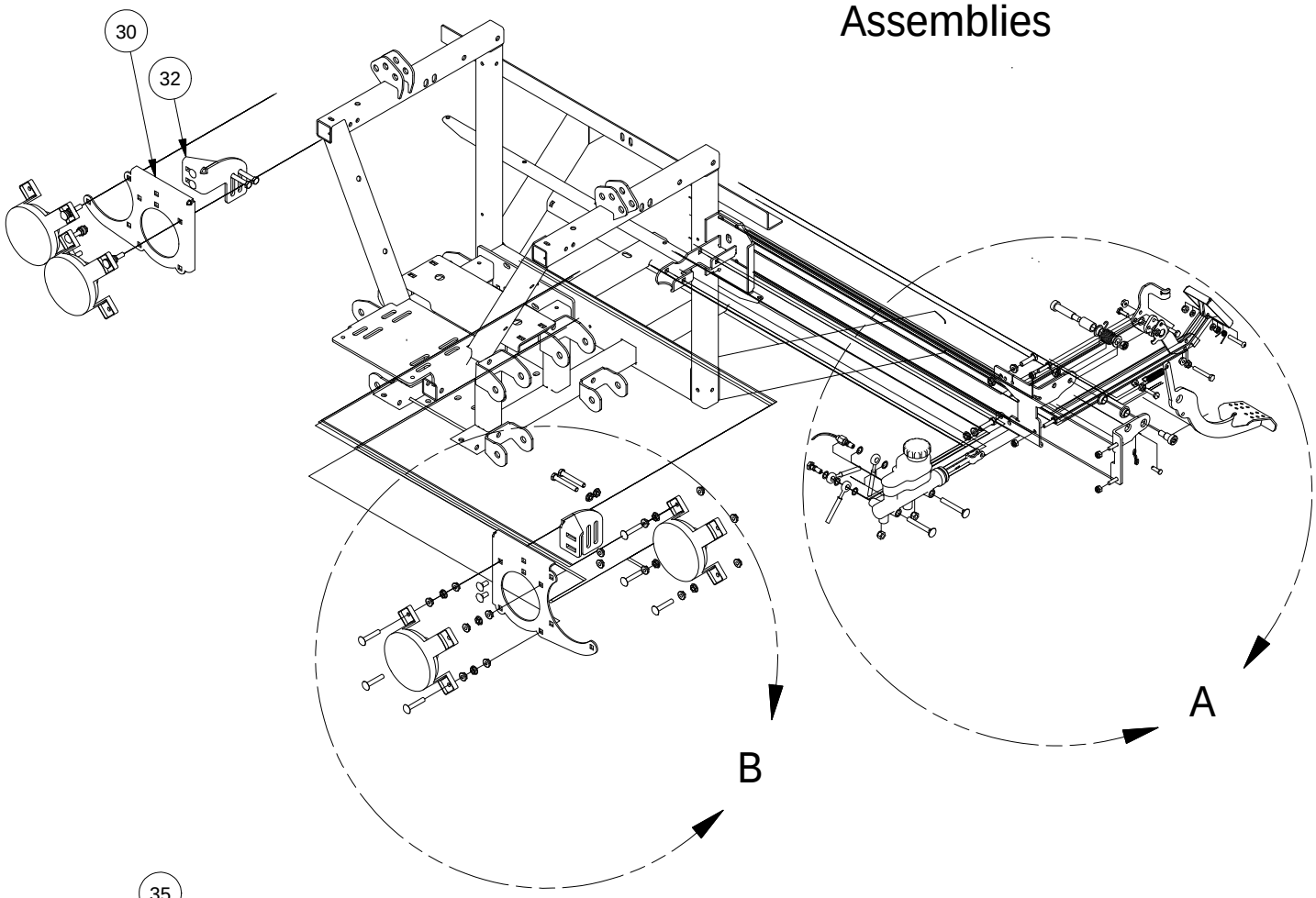

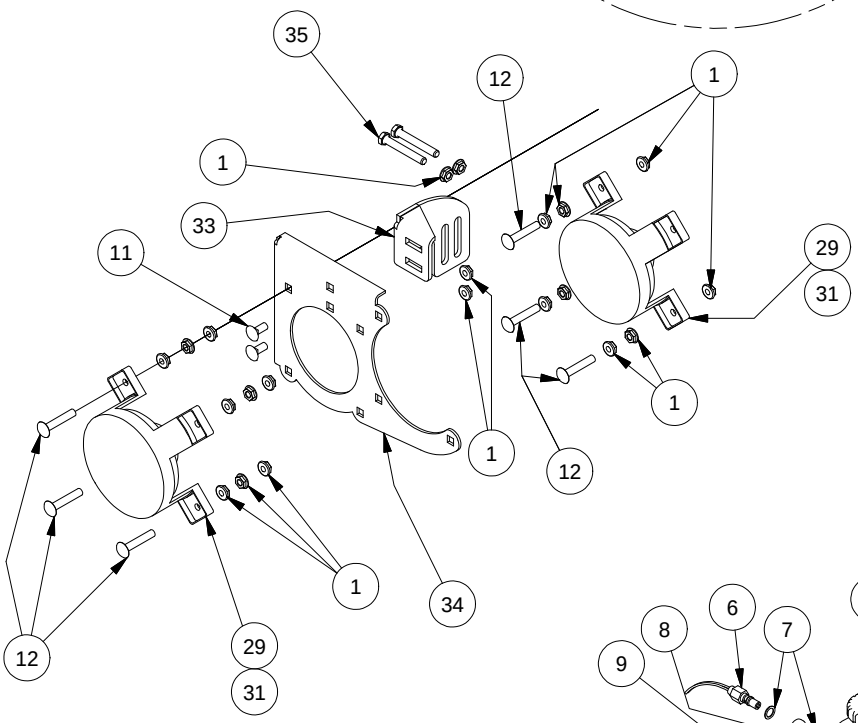

DETAIL B

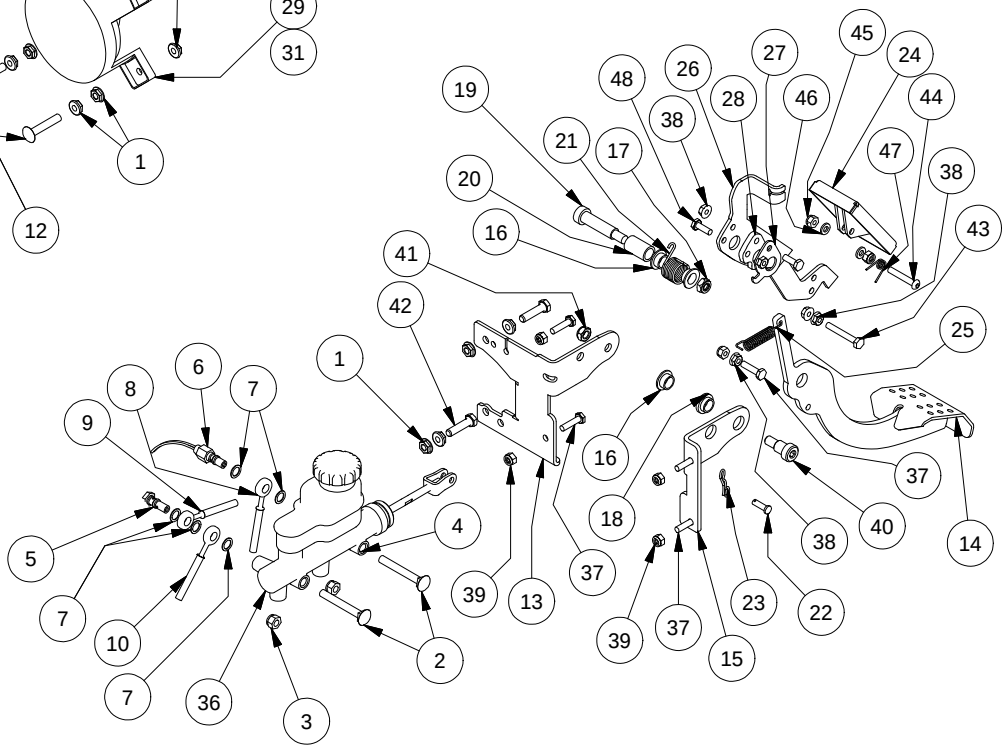

DETAIL A

Parts List			
ITEM	QTY	PART NUMBER	DESCRIPTION
1	48	613-9002-00	5/16-18 Hex Flange Nuts Zinc w/Serations
2	2	618-2019-00	5/16" - 18 X 2-1/2" Carriage Bolt
3	2	613-8047-00	5/16-18 Nylock HEX Nut
4	1	716-1000-00	Master Cylinder, Dual Cylinder
5	1	716-1017-00	Banjo Bolt-Double-10mm-1.0
6	1	777-1011-00	Brake Switch-Banjo-2012
7	5	616-1025-00	10 mm copper crush washer
8	1	716-3012-00	Brake Line-MC to Rear T-Lg UTV
9	1	716-3000-00	Brake Line Front Left-Lg UTV
10	1	716-3002-00	Brake Line Front Right-Lg UTV
11	4	618-8062-00	5/16-18x3/4 Carriage Bolts Zinc
12	12	618-4708-00	5/16-18 x 1-3/4 Carriage bolt
13	1	739-4202-00	Brake Pedal Bracket-Right-2500
14	1	716-2012-00	Brake Pedal Assy-Large UTV
15	1	739-4200-00	Brake Pedal Bracket Left-2500
16	3	632-5000-00	1/2 IDx 5/8 x 5/16 OIB Bushing
17	1	613-2004-00	3/8"-16 Nyloc Jam Nut
18	1	732-2003-00	Bushing, Oil Impregnated
19	1	618-6064-00	12"X1-3/4" Shoulder Bolt
20	1	725-1009-00	Pedal Spring Spacer LRG UTV 1-1/8 spacer
21	1	734-2002-00	Spring-Accelerator Pedal
22	1	620-1000-00	Clevis Pin, 1/4" x 3/4"
23	1	620-1002-00	Bow Tie Clip
24	1	755-1004-00	Accelerator Pedal Assy-LG UTV
25	1	734-2000-00	Spring-Park Brake
26	1	739-4215-00	Accel Pedal Lever
27	1	739-4216-00	Accel Pedal Spring Anchor
28	1	725-1007-00	Accel Pedal Spacer
29	4	786-0016-00	Headlight-High Beam-Large UTV
30	1	739-4054-00	Head Light Bracket-Right
31	1	788-1012-00	4717 LED Headlight
32	1	739-4058-00	Head Light Bracket Brace-Right
33	1	739-4056-00	Head Light Bracket Brace-Left
34	1	739-4052-00	Head Light Bracket-Left
35	4	618-2034-00	5/16" x 2-1/4" Hex Hd Cap Scr.
36	1	785-1020-00	Break Fluid DOT3 .3 quarts
37	5	618-4007-00	1/4-20 x 1 Grade 5 Hex bolts Zinc
38	5	613-9001-00	1/4-20 Hex Flange Nuts Zinc W/Serrations
39	5	613-8073-00	1/4-20 Nylon Insert Locknut Zinc Orange Nylon
40	1	618-6062-00	1/2" x 5/8" Soc. Shoulder Bolt
41	1	613-2004-00	3/8"-16 Nyloc Jam Nut
42	2	618-2029-00	5/16" x 1-1/4" Hex C/S Gr 5
43	1	618-2016-50	1/4-20 x 1-3/4" Hex Bolt
44	1	618-2038-50	1/4-20 X1-1/2" BH Socket Scr Blk
45	2	613-8073-50	1/4-20 Nylon Insert Locknut BL
46	2	619-4012-00	.255 ID x .500 OD x .075 Thick TFE Washer
47	1	734-2003-00	Spring-Accelerator Pedal Assy
48	2	618-8052-00	1/4-20 x 3/4 Grade 5 Hex bolts Zinc

Seat, Dash, and Grill Assemblies

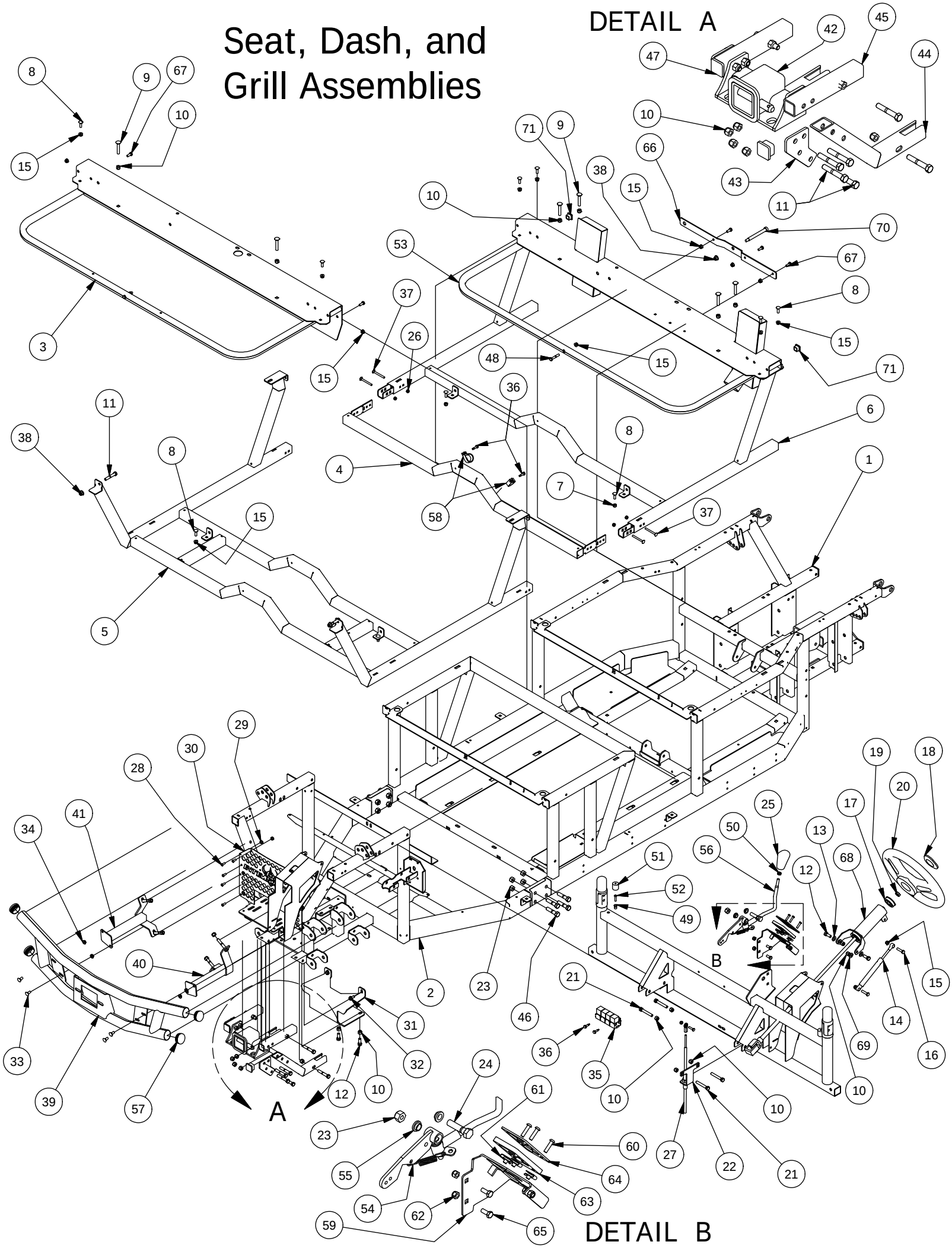

Seat, Dash, and Grill Assembly			
ITEM	QTY	PART NUMBER	DESCRIPTION
1	1	770-3323-00	800cc Crew Cab Rear Main Frame Assembly
2	1	770-3011-00	Front Frame-Truck/Crew Cab
3	1	770-3306-00	Front Seat Frame Assembly Crew Cab
4	1	770-3003-00	Floor Board Support Rear Center Tube Assy
5	1	770-3005-00	Floor Board Support Assembly Crew Cab Front
6	1	770-3001-00	Crew Cab Rear Floor Board Support Assy
7	2	613-8047-00	5/16-18 Nylock HEX Nut
8	10	618-8065-00	5/16-18 x 1 Carriage Bolt
9	6	618-2023-00	3/8"-16 x 2-1/4" Carriage Bolt
10	30	613-5041-00	3/8-16 Nylon Insert Locknut
11	18	618-2022-00	3/8" - 16 X 2-1/4" Hex Bolt
12	4	618-6049-00	3/8-16 X 1 GR 5 Hex Bolts Zinc
13	2	619-0012-00	3/8 ID x 1/8 Plastic Washer
14	1	735-2005-00	Tilt Steering Gas Spring
15	17	613-8049-00	5/16-18 Nylon Insert Flange Nut Zinc Orange Nylon
16	2	618-1077-00	5/16 x 1-1/4 G8 Zn Hex Bolt
17	2	610-2000-00	Steering Column Bearing
18	1	722-2502-00	Steering Wheel Cap-Hurricane
19	1	737-5003-00	Steering Shaft Wheel Nut
20	1	722-2500-00	Steering Wheel Large UTV
21	4	618-2069-00	3/8" - 16 X 2-1/2" Hex Hd Cap Screw
22	1	739-3364-00	Upper Shift Cable Bracket
23	9	613-6037-00	1/2-13 Nylon Insert Locknut
24	1	618-5049-00	1/2-13 x 2 GR5 Hex Bolt Zinc
25	1	745-2001-00	Shift Lever Knob 800cc
26	5	613-8073-00	1/4-20 Nylon Insert Locknut Zinc Orange Nylon
27	1	764-2011-00	Gear Shift Cable, 800cc Crew UTV
28	11	618-8064-50	1/4-20 x 5/8 Button Socket C/S
29	11	613-8073-50	1/4-20 Nylon Insert Locknut BL
30	1	726-4065-00	Front Grill insert 2015
31	1	726-3210-00	Brush Guard Skid Plate
32	2	618-2021-00	5/16" - 18 3/4" Ind Hex Washr Hd - Type F
33	4	618-8062-00	5/16-18x3/4 Carriage Bolts Zinc
34	4	613-9002-00	5/16-18 Hex Flange Nuts Zinc w/Serations
35	4	786-0005-00	12 Volt Cube Relay
36	4	630-7040-00	1/4 x 1 Hex Head Tek Screw
37	4	618-2045-00	1/4-20 x 2 1/2 Carriage Bolt
38	3	613-5202-00	3/8-16 Nylock Flange Nut
39	1	770-3325-00	Intimidator Bumper 2015
40	1	739-3220-00	Brush Guard Mtg Brkt-Left
41	1	739-3221-00	Brush Guard Mtg Brkt-Right
42	1	793-3210-00	Front Receiver Assembly
43	2	739-4401-00	Front Receiver Gusset Intimidator
44	2	703-4401-00	Front Receiver Bottom Tube Intimidator
45	2	703-4400-00	Front Receiver Tube Mtg Tube
46	8	618-6066-00	1/2"-13x2-1/4 Gr8 Hex Cap Scr
47	2	714-1002-00	1-1/4"x1-1/4" Black Tube Plug
48	2	618-8059-00	5/16-18 x 1-3/4 Grade 5 Hex Bolt
49	2	619-0026-00	Rivnut 1/4-20 Steel
50	1	613-6051-00	3/8-24 Hex Nut Zinc
51	2	729-1000-00	Hood Rest Bumper-Lg UTV
52	2	618-2037-50	1/4-20 X1 Button Socket C/S Black
53	1	770-3014-00	Seat Frame Assy, 800cc
54	1	735-2001-00	800cc Shifter Spring
55	4	732-2003-00	Bushing, Oil Impregnated
56	1	769-3002-00	800cc Shift Lever Assy
57	4	614-3410-00	1-3/4" Round Tubing Plug
58	2	772-2012-00	1-3/8 inch Loop Clamp
59	1	739-4521-00	800cc Dash Shifter Indicator Plate Mounting Brkt
60	3	618-2037-50	1/4-20 X1 Button Socket C/S Black
61	3	613-0054-00	1/4-20 Cage Nut
62	3	613-8047-00	5/16-18 Nylock HEX Nut
63	1	726-4100-00	800 cc Dash indicator Plastic Plate
64	1	726-4101-60	800cc Dash Shifter Metal Brkt
65	3	618-8063-00	5/16-18 x 3/4 GR 5 Hex bolt Zinc
66	1	739-3409-00	Rotary Latch Bracket-Frame 800cc
67	5	618-8063-00	5/16-18 x 3/4 GR 5 Hex bolt Zinc
68	1	731-1200-00	Steering Column Assy- Large UTV
69	2	619-0057-50	3/8 Flat Washer Black Zinc
70	1	618-6068-00	12" X 4" Shoulder Bolt
71	2	714-1006-00	1"x1" Black Tube Plug

Plastics Assembly

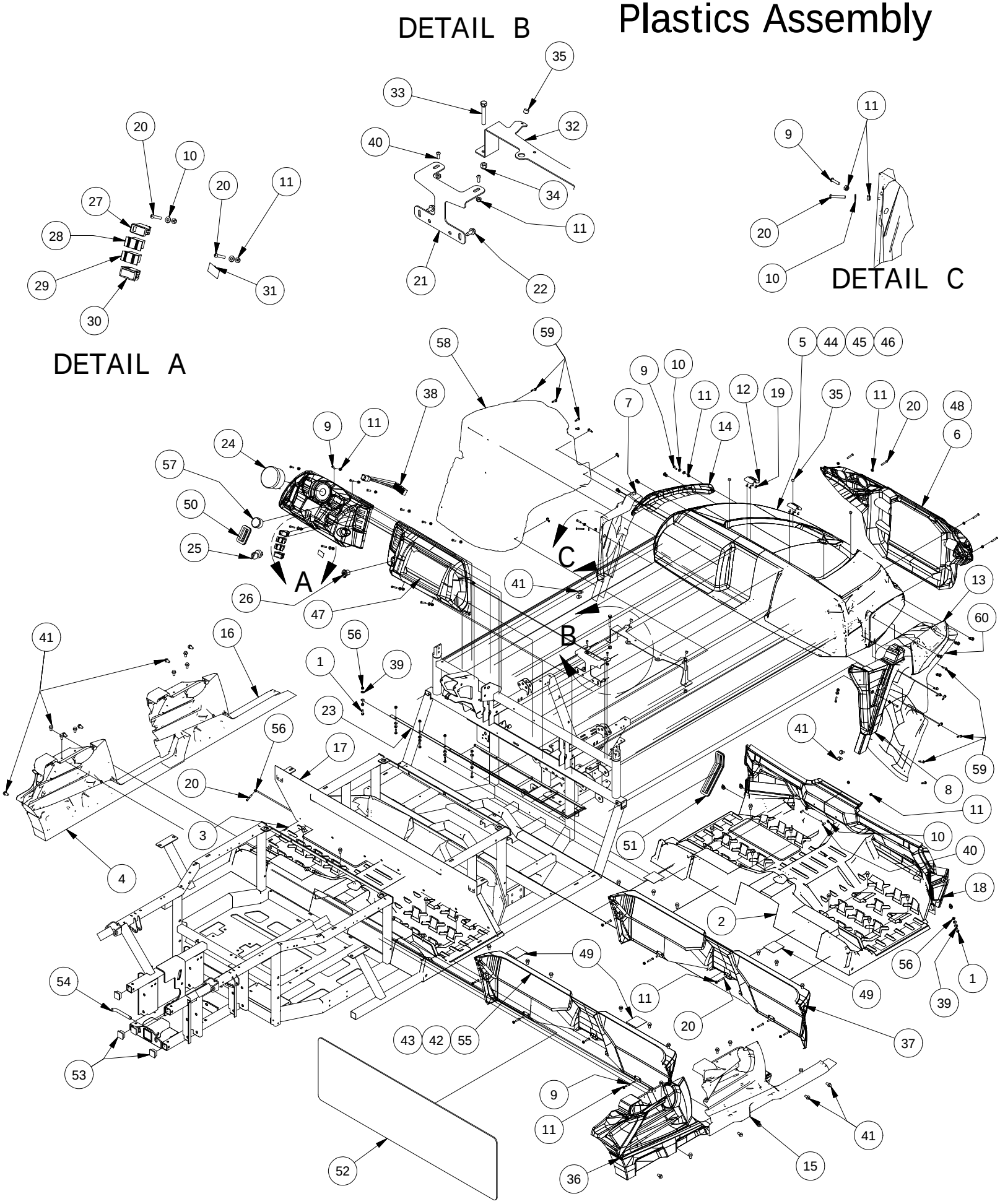

Parts List			
ITEM	QTY	PART NUMBER	DESCRIPTION
1	9	618-4007-00	1/4-20 x 1 Grade 5 Hex bolts Zinc
2	1	780-2015-10	Floor Board-Large UTV-Black
3	1	780-2210-10	Rear Floor Board Crew Cab
4	1	780-2013-10	Left Rear Lower Kick Panel, Crew Cab
5	1	759-2000-00	Hood Large UTV-Orange
6	1	780-2060-10	XD4 Front Grill-Large UTV-Black
7	1	780-2055-10	Lower Front Fender Flare-Left
8	1	780-2050-10	Lower Front Fender Flare-Right
9	23	618-2037-50	1/4-20 X1 Button Socket C/S Black
10	24	619-0010-50	1/4 Flat Washer Black
11	31	613-8073-50	1/4-20 Nylon Insert Locknut BL
12	2	653-5010-00	Hood Hinge
13	1	780-2012-10	Upper Front Fender Flare-Right
14	1	780-2011-10	Upper Front Fender Flare-Left
15	1	780-2209-10	Passenger Front Kick PNL. 4PSG
16	1	780-2208-10	Driver Front Kick PNL. 4PSG
17	1	780-2211-10	Front Seat Back Crew Cab
18	1	780-2010-10	Front Firewall-Large UTV-Black
19	8	630-2050-00	M5-.8 x 10 Pan Phil M/S Zinc
20	23	618-2038-50	1/4-20 X1-1/2" BH Socket Scr Blk
21	1	739-2056-00	Upper Hood Support Brkt-Kohler/Electirc
22	2	618-2021-00	5/16" - 18 3/4" Ind Hex Washr Hd - Type F
23	1	726-3242-60	Firewall Mount Brkt
24	1	786-2020-00	Speedometer/Display Gauge
25	1	777-1000-00	Ignition Switch
26	1	677-2075-00	12 Volt Auxilliary Plug
27	1	786-2038-00	4WD Switch
28	1	786-2034-00	Head Light Hi/off/Low Beam Sw.
29	1	786-2030-00	Differential Lock Switch
30	1	786-2036-00	Dump Bed Up/Down Switch
31	1	786-2040-00	Panel Plug-Eaton Blank Switch
32	1	739-3374-00	Upper Radiator Mounting Brkt
33	2	618-2069-00	3/8" - 16 X 2-1/2" Hex Hd Cap Screw
34	2	613-5041-00	3/8-16 Nylon Insert Locknut
35	6	729-1002-00	Buttom Bumper-Tailgate-2500
36	1	780-2014-10	Right Rear Lower Kick Panel, Crew Cab
37	1	780-2212-00	Front Seat Box 4 Seater
38	1	786-2019-00	Wiring Harness- 800CC Crew Cab
39	15	619-0023-00	5/16 flat Washer 18-8 SS
40	4	618-8064-50	1/4-20 x 5/8 Button Socket C/S
41	54	618-6065-00	AUEVCO P/N 17216 HOLE PLUG BLACK
42	1	780-2020-20	Center Seat Panel-Large UTV-Gr
43	1	780-2020-30	Center Seat Panel-2500-Camo
44	1	759-2000-20	Hood-OD Green
45	1	759-2000-30	Hood-Camo
46	1	759-2000-40	Hood-Metallic Black
47	1	780-2040-00	Glovebox
48	1	780-2061-10	Base Model Front Grill
49	4	729-1006-00	Seat Pin Frame Guard-3x3.125"
50	1	736-2000-00	Shift Lever Boot-Large UTV
51	1	736-2002-00	Break Pedal Boot-Lg UTV
52	1	789-0001-00	Kohler 750 CVT Cover Instualton
53	4	714-1004-00	1-1/4"x1-1/4" Black Tube Plug
54	1	793-3212-00	Hitch Pin
55	1	780-2020-00	Center Seat Panel-Large UTV-Or
56	17	613-8073-00	1/4-20 Nylon Insert Locknut Zinc Orange Nylon
57	1	786-2024-00	Indicator Light
58	1	780-2077-10	Intimidator Left Inner Fender
59	15	630-7040-00	1/4 x 1 Hex Head Tek Screw
60	1	780-2078-10	Intimidator Right Inner Fender

Radiator Assembly

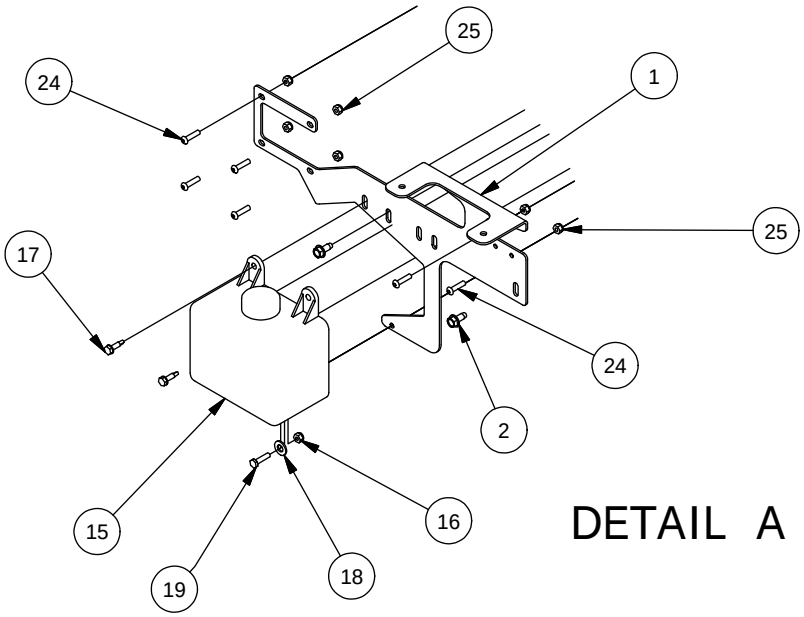

DETAIL A

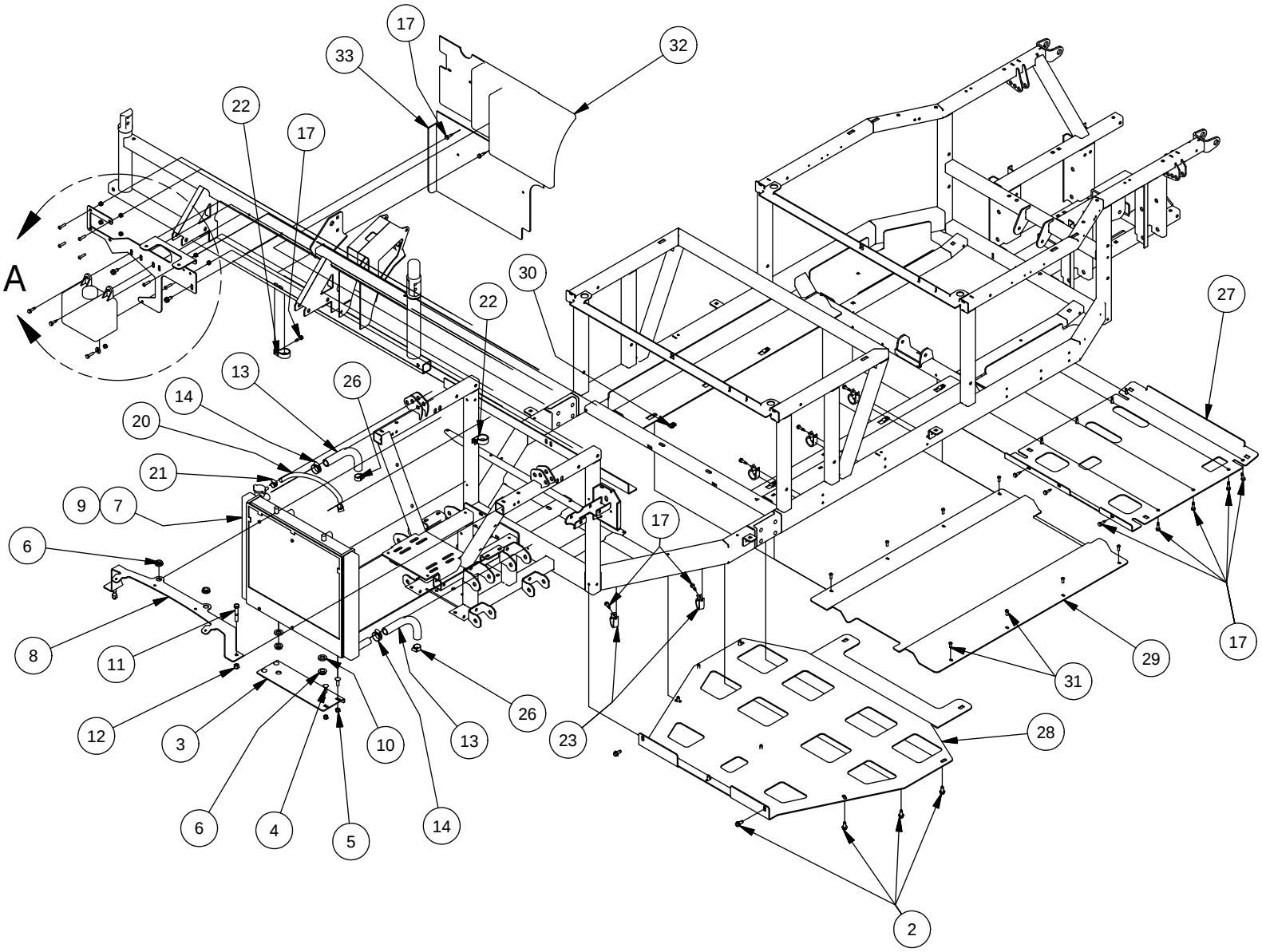

Radiator Assembly			
ITEM	QTY	PART NUMBER	DESCRIPTION
1	1	739-2057-00	Upper Hood Support Brkt-Diesel-Weber
2	12	618-2021-00	5/16" - 18 3/4" Ind Hex Washr Hd - Type F
3	1	739-3337-00	Lower Radiator Mounting Brkt
4	4	618-8065-00	5/16-18 x 1 Carriage Bolt
5	4	613-8047-00	5/16-18 Nylock HEX Nut
6	4	719-5000-00	Radiator Grommets
7	1	761-2006-00	RadiatorAssy-Large MTV
8	1	739-3374-00	Upper Radiator Mounting Brkt
9	1	786-2069-00	800cc Fan / Over Temperature Switch, Includes Contacts and Boot (M22 THREADS)
10	2	619-6017-00	.635ID Plastic Washer
11	2	618-2022-00	3/8" - 16 X 2-1/4" Hex Bolt
12	2	613-5041-00	3/8-16 Nylon Insert Locknut
13	2	751-3015-00	Coolant Hose 3/4" ID
14	2	772-2017-00	ABA 22-32mm x 12mm Wide Hose Clamp
15	1	767-2006-00	Radiator Overflow Bottle-2500
16	1	613-8073-00	1/4-20 Nylon Insert Locknut Zinc Orange Nylon
17	22	630-7040-00	1/4 x 1 Hex Head Tek Screw
18	1	619-0057-50	3/8 Flat Washer Black Zinc
19	1	618-4007-00	1/4-20 x 1 Grade 5 Hex bolts Zinc
20	1	751-1013-00	5/16" Hose - High Temp
21	2	672-8067-00	Hose Clamp No. 4 - 7/32 - 5/8
22	2	772-2012-00	1-3/8 inch Loop Clamp
23	5	672-9000-00	1/2 EPDM Cushion Clamp
24	6	618-2037-50	1/4-20 X1 Button Socket C/S Black
25	6	613-8073-50	1/4-20 Nylon Insert Locknut BL
26	2	772-2026-00	15-24mm Screw Clamp
27	1	726-3255-00	800cc Engine Skid Plate
28	1	726-3258-00	800cc Classic Front Skid Plate
29	1	726-3256-00	800cc Crew Cab Mid Skid Plate
30	8	613-0054-00	1/4-20 Cage Nut
31	8	618-8064-00	1/4-20 x 5/8 Buttonhead Socket C/S 18-8 SS
32	1	780-2223-00	Dashboard Upper Heat Shield without PWR Steering
33	1	780-2224-00	Dashboard Lower Heat Shield without PWR Steering

Engine only Assembly

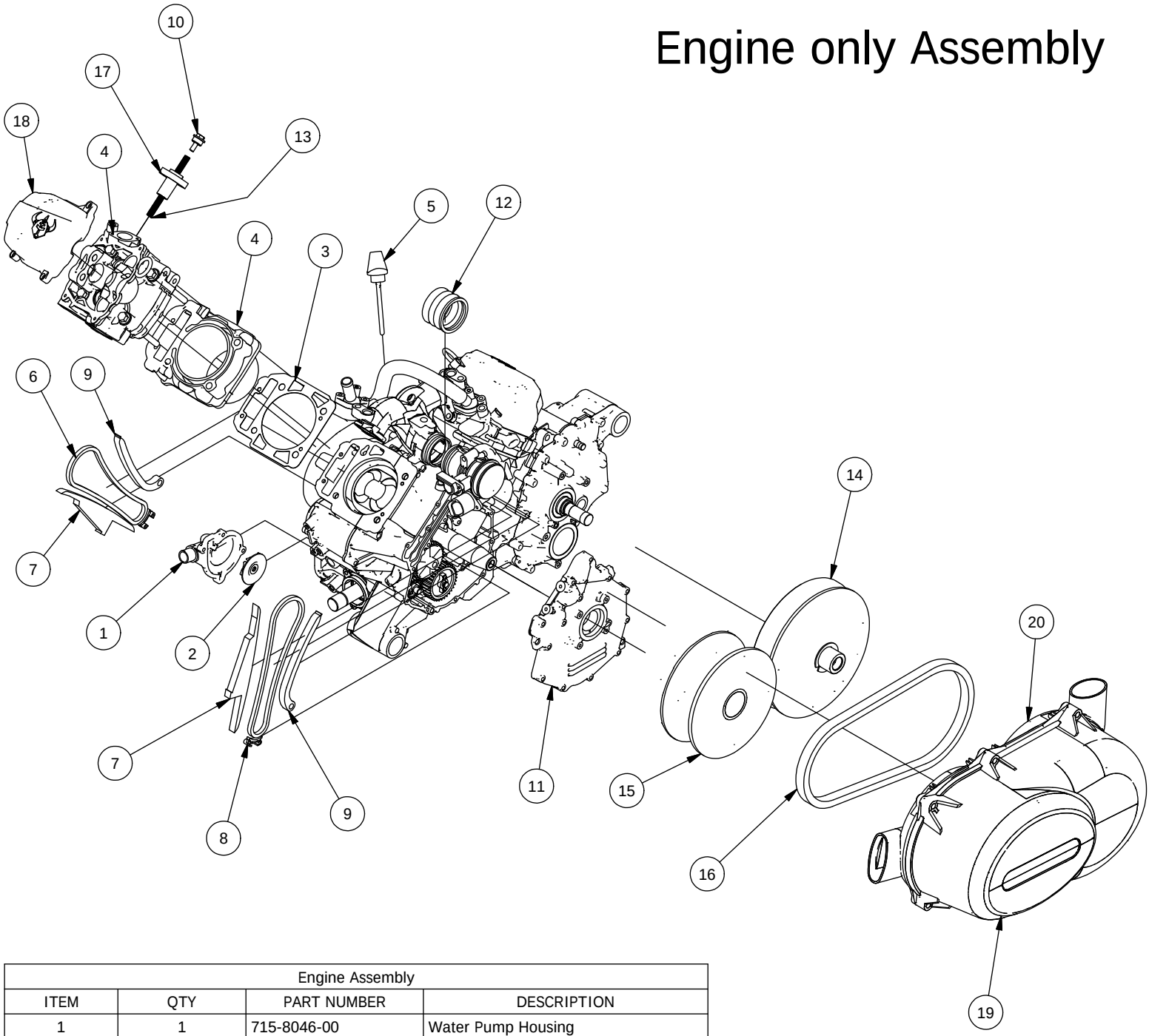

Engine Assembly			
ITEM	QTY	PART NUMBER	DESCRIPTION
1	1	715-8046-00	Water Pump Housing
2	1	715-8045-00	Impeller-Water
3	2	715-8047-00	Gasket Paper
4	1	715-8001-00	Cylinder Front
5	1	715-8035-00	Oil Dipstick
6	2	715-8005-00	Silent Chain 6.35Px112
7	2	715-8003-00	Chain Guide
8	2	715-8004-00	Chain Guide
9	2	715-8002-00	Chain Tension Guide
10	2	715-8007-00	Chain Tensioner Plunger
11	1	715-8020-00	PTO Cover
12	1	751-3013-00	800cc Engine Intake Manifold Hose
13	2	715-8008-00	Spring
14	1	715-8049-00	Driving Wheel
15	1	715-8048-00	Driving Wheel
16	1	715-8050-00	VBelt
17	2	715-8006-00	Chain Tensioner Housing
18	2	715-8065-00	Valve Cover
19	1	715-8193-00	Variator Cover
20	1	715-8212-00	CVT Air Guide

Engine Assembly

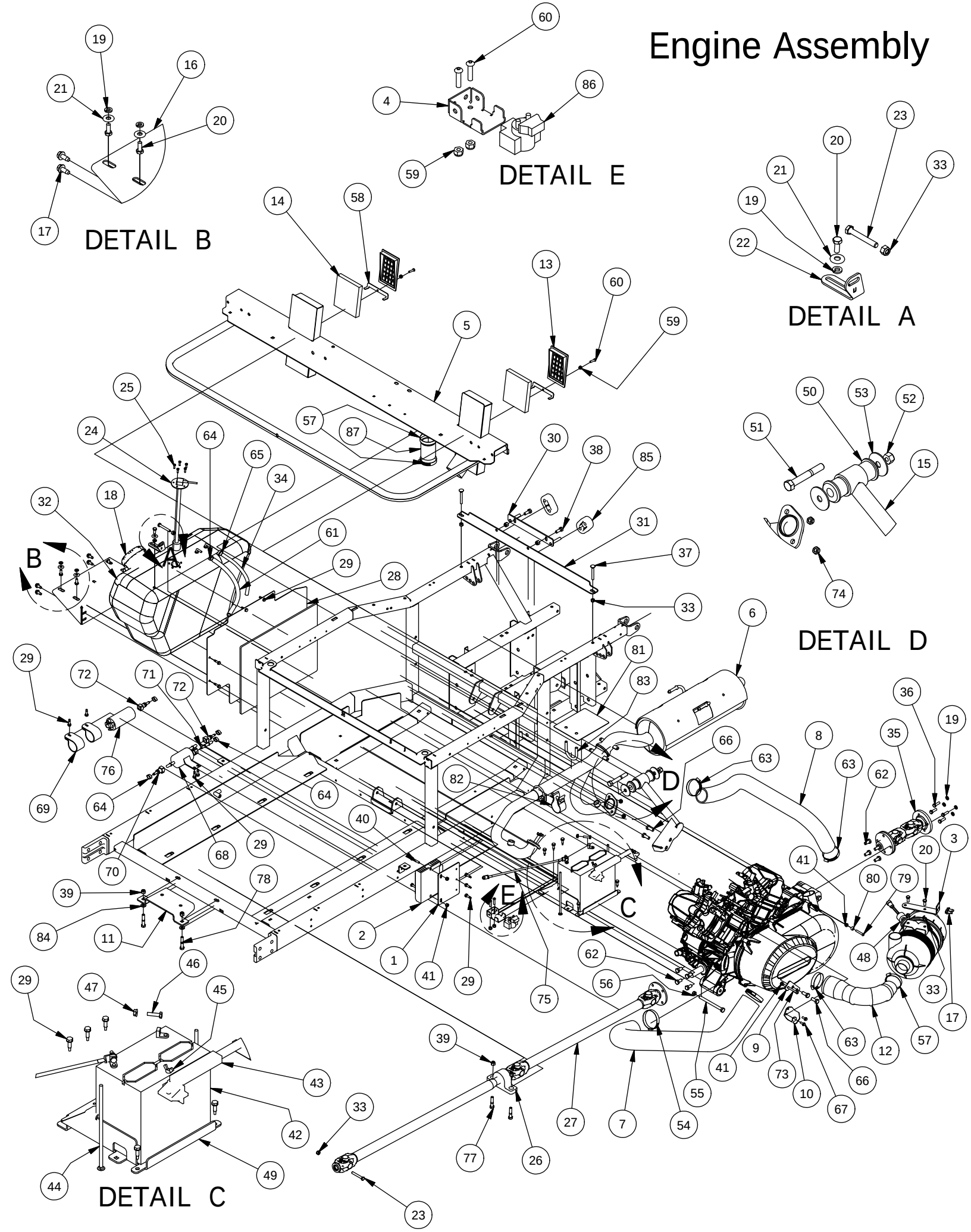

Parts List			
ITEM	QTY	PART NUMBER	DESCRIPTION
1	1	739-3893-00	800cc Rectifire Module Bracket
2	1	715-8200-00	Voltage Regulator
3	1	739-4512-00	800cc Air Filter Bracket
4	1	739-4514-00	800cc Starter Relay Bracket
5	1	770-3014-00	Seat Frame Assy, 800cc
6	1	715-3020-00	Exhaust System Assembly, 800cc
7	1	751-1028-00	800cc CVT Air Inlet Hose
8	1	751-1029-00	800cc CVT Air Outlet Hose
9	1	739-4516-00	800cc Coil Mount Bracket
10	1	739-4510-00	800cc Shift Cable Bracket
11	1	739-4513-00	800cc Crew Cab Bearing Pillow Block Bracket
12	1	751-3014-00	800cc Engine Throttle Body Intake Hose
13	2	780-2100-00	CVT Plenum Bezel
14	2	763-2100-00	CVT Plenum Filter Media
15	1	770-3339-00	800cc Upper Engine Mount Assembly
16	1	739-2058-00	Lower Fuel Tank Support Brkt
17	6	618-2021-00	5/16" - 18 3/4" Ind Hex Washr Hd - Type F
18	1	767-2002-00	Fuel Tank Cap-Lg UTV-Gas
19	9	619-8051-00	5/16 Lockwasher Zinc
20	7	618-8063-00	5/16-18 x 3/4 GR 5 Hex bolt Zinc
21	5	619-8044-00	5/16 USS Flat Washer Zinc
22	1	739-2059-00	Upper Fuel Tank Support Brkt
23	2	618-2034-00	5/16" x 2-1/4" Hex Hd Cap Scr.
24	1	786-2004-00	Fuel Sender
25	5	618-2105-00	10-32 x 5/8" Indented hex Head machine Screw
26	1	710-2019-00	Pillow Block Bearing
27	1	737-2037-00	Front Drive Shaft 800cc Crew Cab
28	1	726-3400-00	Gas Tank Heat Shield Classic & Cew
29	18	630-7040-00	1/4 x 1 Hex Head Tek Screw
30	1	770-3340-00	800cc Muffler Mounting Bracket Assembly
31	1	739-4520-00	800 cc Muffler Frame Bracket
32	1	767-2000-00	Gas Tank, Weber/800CC Engine
33	6	613-8047-00	5/16-18 Nylock HEX Nut
34	1	751-1017-00	1/4 Fuel Line - Low Perm
35	1	737-2038-00	Rear Drive shaft 800cc
36	4	618-1080-00	5/16-18 x 1" GR 8 Hex bolt
37	2	618-2019-00	5/16" - 18 X 2-1/2" Carriage Bolt
38	2	618-6049-00	3/8-16 X 1 GR 5 Hex Bolts Zinc
39	8	613-5041-00	3/8-16 Nylon Insert Locknut
40	2	618-5005-00	1/4-20 x 1-1/2 Grade 5 Hex bolts Zinc
41	4	613-8073-00	1/4-20 Nylon Insert Locknut Zinc Orange Nylon
42	1	768-1000-00	12 Volt Battery
43	1	643-8929-98	Battery Hold Down
44	2	618-1084-00	1/4-20 x 8 Carriage Bolt Zinc
45	2	613-2005-00	1/4-20 Wing Nut Zinc
46	2	618-4007-00	1/4-20 x 1 Grade 5 Hex bolts Zinc
47	2	613-9001-00	1/4-20 Hex Flange Nuts Zinc W/Serrations
48	1	763-3006-00	Filter Restriction Switch
49	1	739-3434-00	800cc UTV Battery Box
50	2	732-2000-00	Large MTV A-Arm Bushing
51	1	618-2006-00	1/2" - 13X3-1/2" Hex Bolt Gr 5
52	1	613-6037-00	1/2-13 Nylon Insert Locknut
53	2	619-0060-00	1/2 Washer Zinc
54	2	772-2025-00	1-15/16 to 2 - 1/2 Hose Clamp
55	2	618-2112-00	Hex Bolt
56	2	613-2011-00	10mm Nylon Insert Locknut
57	3	672-9052-00	1-15/16 to 2 - 1/2 Hose Clamp
58	2	739-3420-00	CVT Enclosure Bracket
59	4	613-8073-50	1/4-20 Nylon Insert Locknut BL
60	4	618-2037-50	1/4-20 X1 Button Socket C/S Black
61	1	751-1019-00	3/8" ID Hose
62	8	618-2099-00	M10 x 1.25 x 20mm Hex Cap Bolt
63	3	772-2023-00	58 mm - 75 mm x 12 mm ABA 1075 Clamp
64	5	772-2021-00	12.5mm - 15mm Two Ear Clamp
65	1	772-2022-00	15mm-18mm Two Ear Clamp
66	4	618-2100-00	M10 x 1.5 x 25MM tap bolt
67	2	618-2065-00	M6 x 1.0 x 16 Flange Hex Bolt
68	1	715-4001-00	Fuel Filter/Regulator
69	2	772-2027-00	800cc Fuel Pump Mount
70	1	773-0001-00	3/8" Female Fuel line Quick Disconnect
71	1	773-0002-00	3/8" Male Fuel Line Quick Disconnect
72	2	773-0003-00	5/16" Female Fuel Line Quick Disconnect
73	1	618-1055-50	1/4-20 x 3 Button C/S Black
74	4	613-8051-00	M8-1.25 Hex Toplock Nut-Zinc
75	1	664-0025-00	39" Battery Cable 2 Gauge
76	1	750-1002-00	Electric Fuel Pump, Weber/800CC ENGINE
77	4	618-6050-00	3/8-16 x 1-3/4 Hex Bolt Zinc
78	2	618-2024-00	3/8 -16 X 2" Hex Bolt
79	1	618-2038-50	1/4-20 X1-1/2" BH Socket Scr Blk
80	1	725-3211-00	Spacer for shifter cable at transmission
81	1	726-4510-00	800cc Exhaust Pipe Heat Shield
82	1	715-3022-00	Exhaust Pipe Band Clamp
83	1	715-3023-00	Exhaust Pipe Heat Shield Clamp
84	4	619-0057-50	3/8 Flat Washer Black Zinc
85	2	787-3020-00	Muffler Hanger 800 Engine
86	1	715-4000-00	Starter Solenoid, 800cc Engine
87	1	736-2007-00	Air Box to Frame Hose, 2-3/4"L x 2" ID

Rear Suspension Assembly

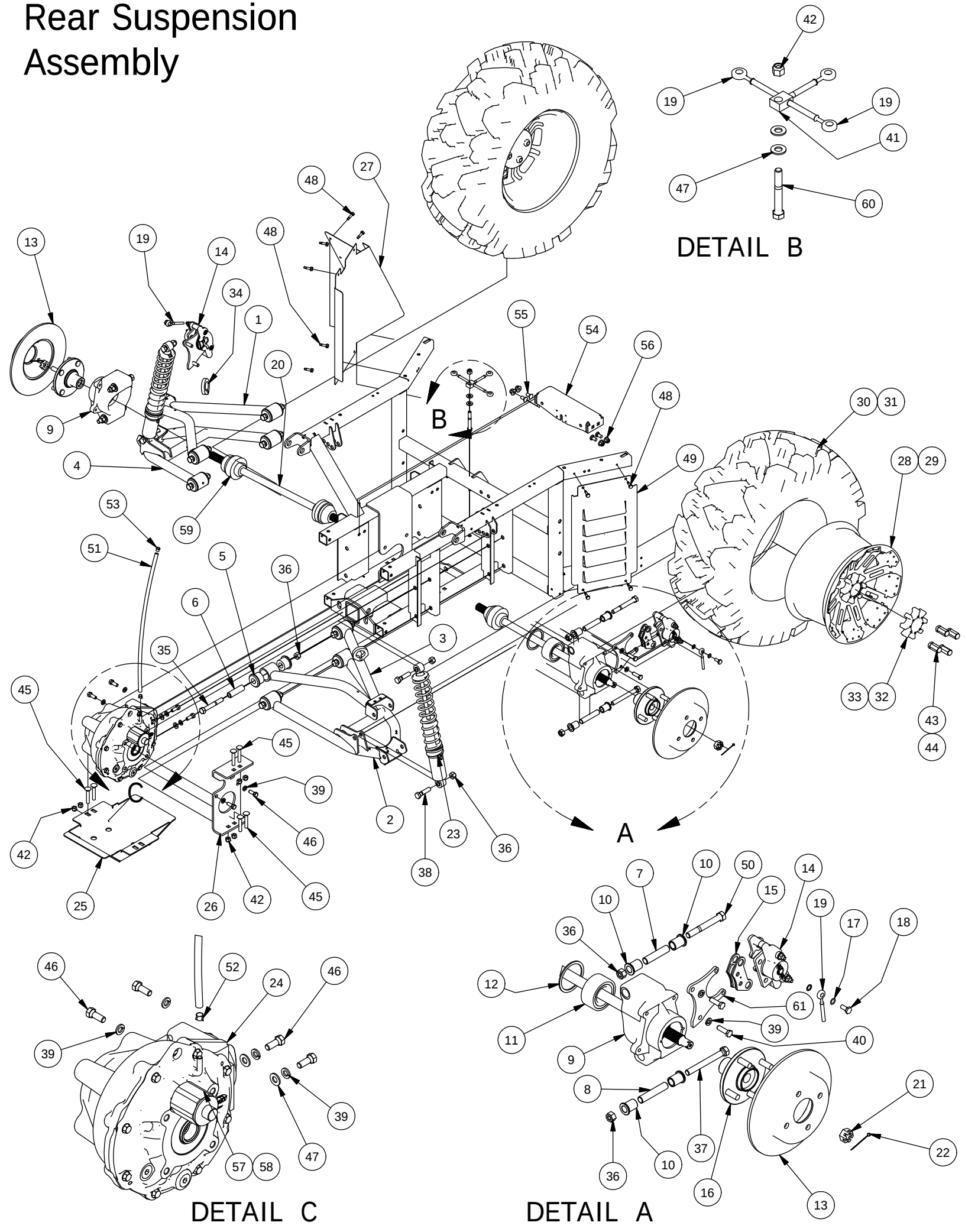

Parts List			
ITEM	QTY	PART NUMBER	DESCRIPTION
1	1	787-3210-00	Extended Left Rear Upper A-arm Assy
2	1	787-3213-00	Extended Right Rear Lower A-Arm Assy
3	1	787-3211-00	Extended Right Rear Upper A-arm assy
4	1	787-3212-00	Extended Left Rear Lower A-arm Assy
5	16	732-2000-00	Large MTV A-Arm Bushing
6	8	732-2001-00	Large MTV A-Arm Bushing Sleeve
7	1	725-3025-00	IRS Upper Spacer
8	1	725-3026-00	IRS Lower Spacer
9	1	787-2000-00	Independent Rear Suspension
10	4	710-2000-00	Flange BUSHING-Large UTV
11	2	710-2002-00	Spindle Bearing LRG UTV
12	2	710-2003-00	Retaining Ring-Spindle Bearing
13	2	716-2000-00	Rotor - Large UTV
14	2	616-1051-00	Hydraulic Caliper
15	1	616-1056-00	Break Pad Kit (2 pads per kit)
16	2	786-2000-00	Hub-Large UTV
17	4	616-1025-00	10 mm copper crush washer
18	2	616-1015-00	Banjo Bolt M 10mm x 1.0
19	2	716-3006-00	Brake Line Rear-Lg UTV
20	2	737-2034-00	Half-Shaft - Rear Large UTV
21	2	765-1012-00	Rear Hub Castle Nut
22	2	765-1016-00	Rear Hub Castle Nut Cotter Pin
23	2	787-2010-00	Rear Shock-Lg. UTV-Gas & Diesel
24	1	737-3005-00	Rear Differential, Large MTV
25	1	726-3257-00	800cc Rear Diff Skid Plate
26	1	739-4511-00	800cc Rear Differential Bracket
27	1	726-3229-00	Left Rear Fender Well 800cc
28	1	722-4002-00	XD4 Rear Wheel
29	1	722-4007-00	Base Rear Wheel
30	1	722-4100-00	XD4 Rear Tire
31	1	722-4113-00	Base Rear Tire
32	2	722-4004-00	XD4 Wheel Center Cap
33	1	722-4110-00	Base Wheel Center Cap
34	2	772-2050-00	Break Line Anchor-1-1/4"
35	8	618-2006-00	1/2" - 13X3-1/2" Hex Bolt Gr 5
36	16	613-6037-00	1/2-13 Nylon Insert Locknut
37	2	618-2030-00	1/2" -13 x 4.5" Hex Cap Screw
38	4	618-5049-00	1/2-13 x 2 GR5 Hex Bolt Zinc
39	10	619-5037-00	3/8 Lockwasher Zinc
40	4	618-5040-00	3/8-16 x 1-1/4 Hex Bolt GR5
41	1	716-3010-00	Brake Line Tee-Rear-Lg UTV
42	7	613-5041-00	3/8-16 Nylon Insert Locknut
43	8	613-0001-00	XD4 Lug Nut
44	1	713-1012-50	Base Lug Nut
45	6	618-2023-00	3/8"-16 x 2-1/4" Carriage Bolt
46	6	618-6049-00	3/8-16 X 1 GR 5 Hex Bolts Zinc
47	4	619-0057-50	3/8 Flat Washer Black Zinc
48	10	630-7040-00	1/4 x 1 Hex Head Tek Screw
49	1	726-3260-00	Right Lowered Rear Fender Well
50	2	618-2003-00	1/2" -13 x 4" Hex Cap Screw Gr 5
51	1	751-1018-00	5/16 ID 7/16 OD Hose
52	1	772-1001-00	5/16 Spring Hose Clamp
53	1	724-1045-00	Breather Plug Threaded
54	1	739-3380-00	Rear Diff Cage Top Brace
55	4	618-2068-00	3/8 x 3/4" GR 8 Carr Bolts Zinc
56	4	613-5202-00	3/8-16 Nylock Flange Nut
57	1	737-3006-00	Rear Diff Lock Solenoid
58	1	737-3007-00	Rear Diff Lock Solenoid Spring
59	4	712-3222-00	Half Shaft CV Boot Kit
60	1	618-2078-00	3/8-16 x 2-3/4 Hex C/S GR2 Zinc
61	2	639-0054-00	Brake Caliper Brkt-Ausco-Elect

Crew Cab Roll Cage Assembly

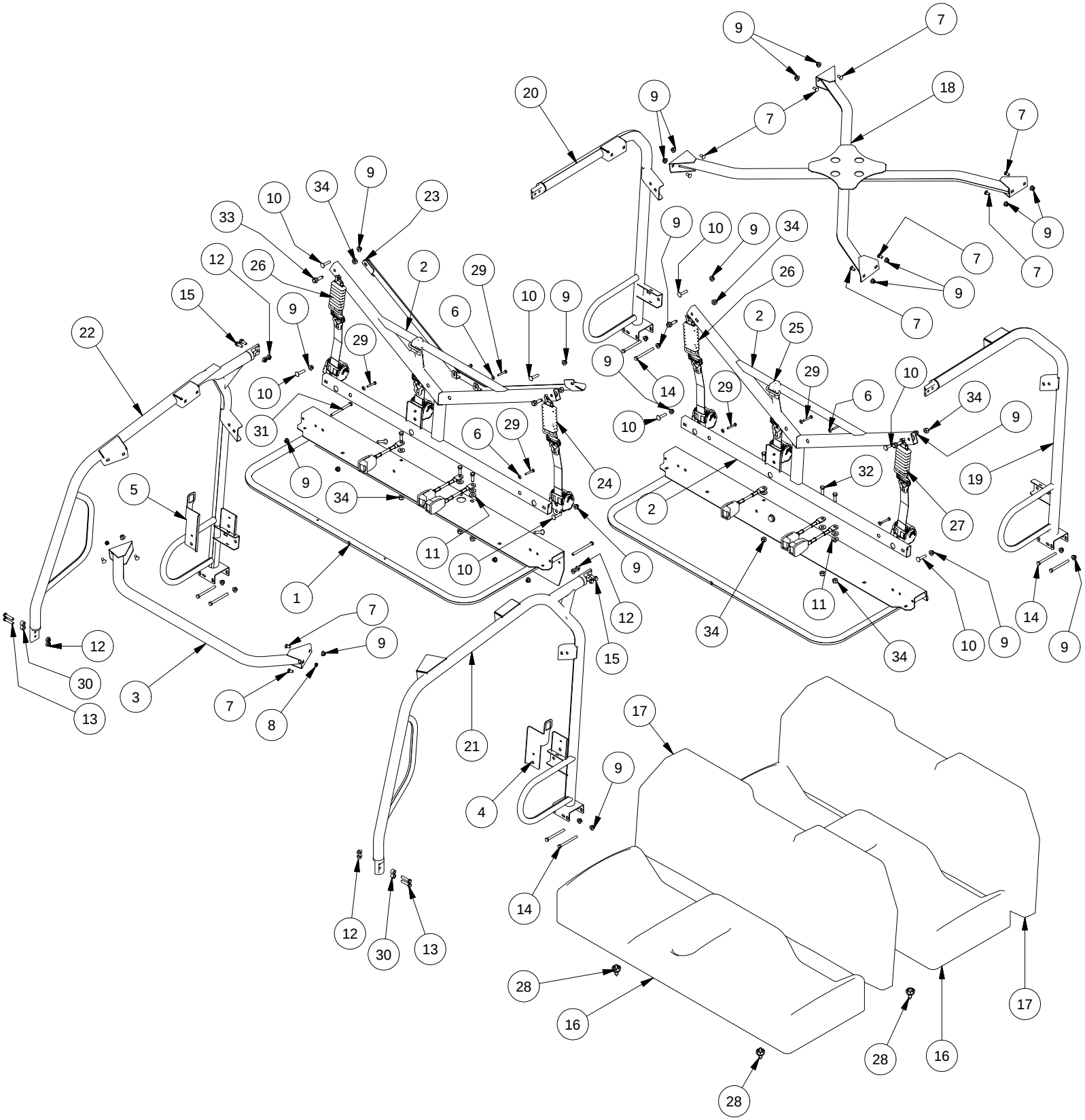

Parts List			
ITEM	QTY	PART NUMBER	DESCRIPTION
1	1	770-3306-00	Front Seat Frame Assembly Crew Cab
2	2	780-3002-00	ROPS K Brace Assy For Seat Back w/ Integral Headrest
3	1	703-3318-00	ROPS Front Cross Brace
4	1	739-4498-00	Crew Cab Rear Side Net Latch Bracket left
5	1	739-4499-00	Crew Cab Rear Side Net Latch Bracket Right
6	8	619-4008-00	1/4 Lock Washer Zinc
7	12	618-2068-00	3/8 x 3/4" GR 8 Carr Bolts Zinc
8	2	613-2004-00	3/8"-16 Nyloc Jam Nut
9	30	613-5202-00	3/8-16 Nylock Flange Nut
10	10	618-2048-00	3/8-16 x 1-3/4 Carriage Bolt
11	8	619-8052-00	7/16 USS Flat Washer Zinc
12	8	613-5201-00	3/8-16 Serrated Flange Nut
13	4	618-2008-00	3/8"-16X1-3/4" Gr 8 C/S
14	8	618-1081-00	3/8" -16 x4 Gr.8 Hex bolt Cs
15	4	618-6055-50	3/8 - 16 X 1 Flange Bolt BLK Gr.8
16	2	771-2002-00	Seat Bottom-Large UTV
17	2	771-2001-00	Seat Back-Large UTV
18	1	780-3022-00	ROPS X-Brace Assembly Crew Cab
19	1	780-3014-00	ROPS Left Rear Hoop Assy Crew Cab
20	1	780-3016-00	ROPS Right Rear Hoop Assy Crew Cab
21	1	780-3018-00	ROPS Left Front Hoop Assy Crew Cab
22	1	780-3020-00	ROPS Right Front Hoop Assy Crew Cab
23	1	770-3310-00	Crew Cab Rear Handhold Assy
24	1	771-1017-00	Seat Belt Assy-3 Point-Front Drivers Side
25	2	771-1016-00	Seat Belt Assy-3 Point-Center
26	2	771-1015-00	Seat Belt Assy-3 Point-Passangers Side
27	1	771-1014-00	Seat Belt Assy-3 Point-Rear Drivers Side
28	4	739-2300-00	Seat Pin Latch Assembly
29	8	618-2016-50	1/4-20 x 1-3/4" Hex Bolt
30	4	725-4005-00	Spacer, .75 O.D. x .400 I.D. x .500"L
31	2	618-2104-00	3/8-16 x 4-1/2 Hex Cap Screw GR 8
32	6	618-2097-00	7/16-20 x 1-1/4 GR5 Hex Cap Screw
33	4	618-2096-00	7/16-20 x 1 3/8 GR5 Shoulder Bolt
34	10	613-0026-00	7/16-20 Nylon Insert Locknut

Crew Cab
Safety Nets Assemblies

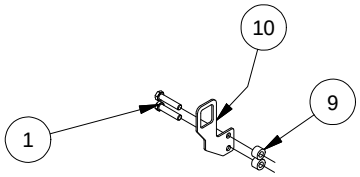

DETAIL B

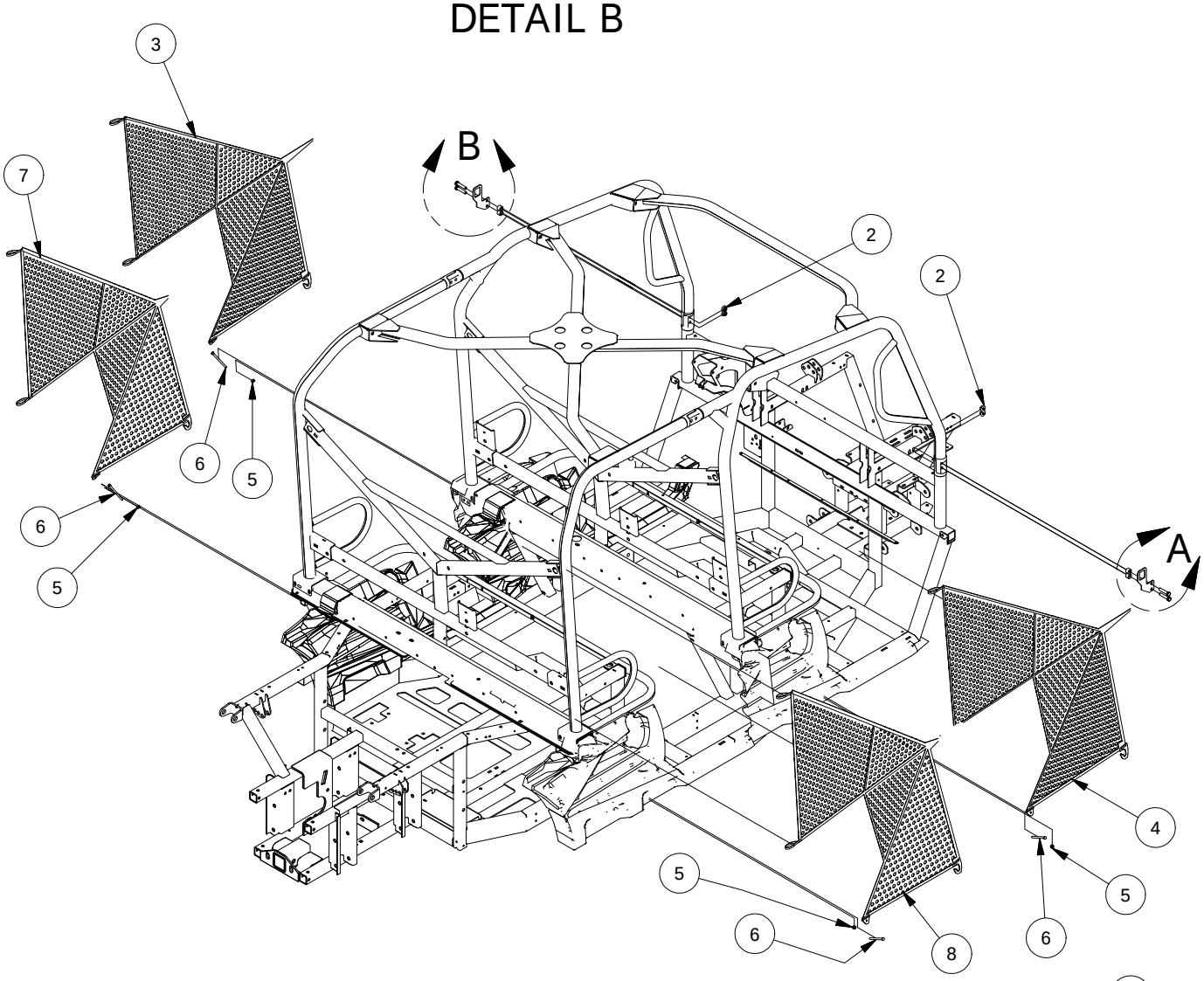

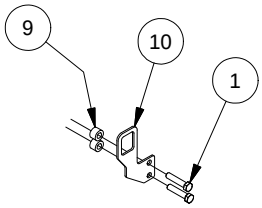

DETAIL A

Parts List			
ITEM	QTY	PART NUMBER	DESCRIPTION
1	4	618-2008-00	3/8"-16X1-3/4" Gr 8 C/S
2	4	613-5201-00	3/8-16 Serrated Flange Nut
3	1	771-1010-00	Side Net - Left Side
4	1	771-1011-00	Side Net - Right Side
5	8	613-8073-50	1/4-20 Nylon Insert Locknut BL
6	4	618-1055-50	1/4-20 X3" (GRS) Carriage Bolt
7	1	771-1012-00	Rear Side Net - Left Side Intimidator
8	1	771-1013-00	Rear Side Net - Right Side Intimidator
9	4	725-4005-00	Spacer, .75 O.D. x .400 I.D. x .500"L
10	2	739-4069-00	Front side net female buckle Mounting Brkt 2017

Bed Assembly 1

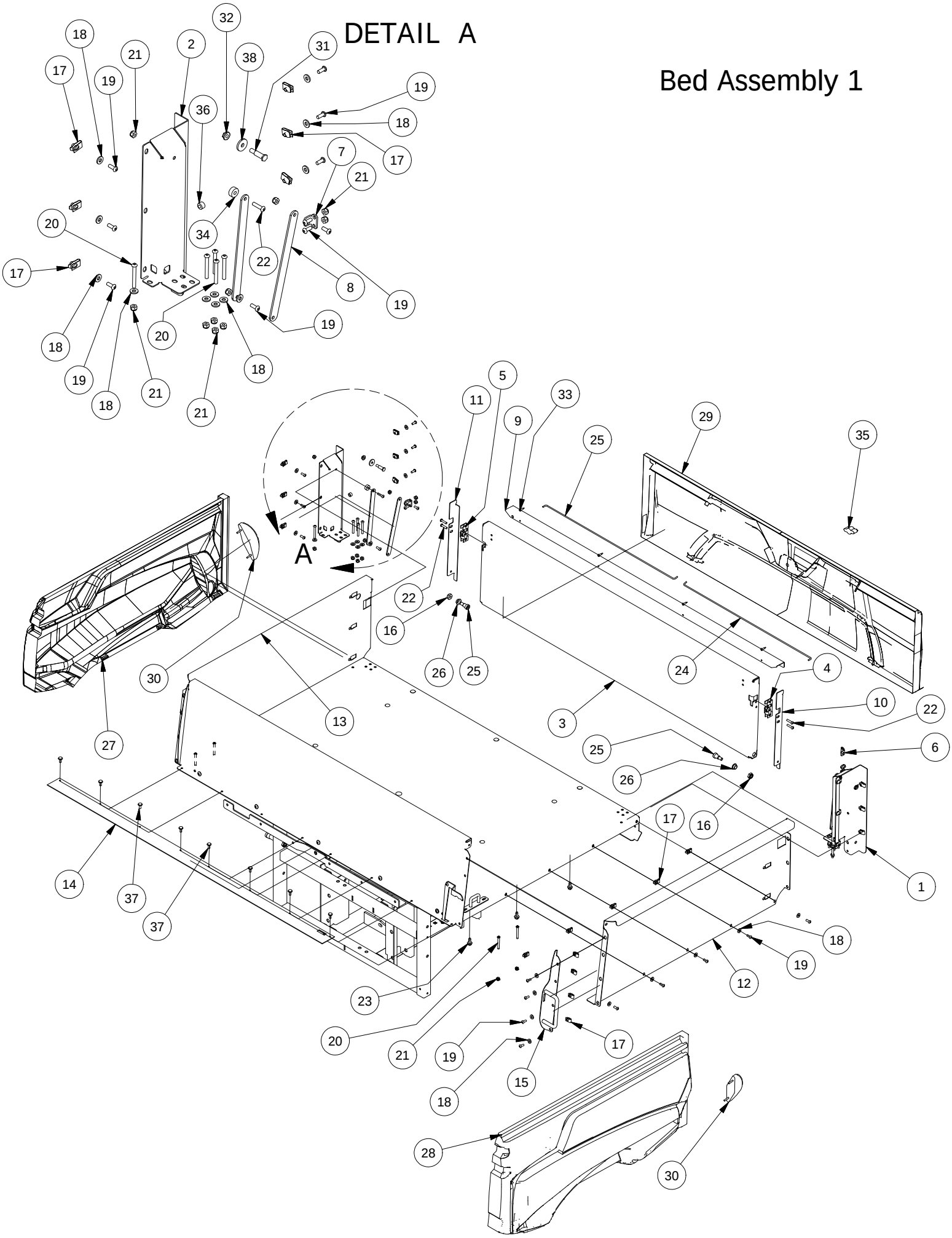

Bed Assembly 1			
ITEM	QTY	PART NUMBER	DESCRIPTION
1	1	703-4008-10	Bed Side Support-Left
2	1	703-4006-10	Bed Side Support-Right
3	1	726-4008-10	Standard Bed Tailgate
4	1	752-1008-00	Tailgate Rotary Latch-Left
5	1	752-1010-00	Tailgate Rotary Latch-Right
6	1	739-4004-60	Tailgate Support Bracket (Left)
7	1	739-4002-60	Tailgate Support Bracket (Right)
8	4	739-4016-60	Tailgate Support Arm-2500
9	1	703-4002-20	Top Tailgate Guard
10	1	703-4014-20	Left TG Side Cover
11	1	703-4012-20	Right TG Side Cover
12	1	726-4004-20	Standard Bed Left Side
13	1	726-4006-20	Standard Bed Right Side
14	1	712-3020-00	Bed Dust Seal
15	1	769-4002-00	Dump Bed Handle Assy
16	6	613-0040-00	1/2-13 Nylon Insert Jam Locknut
17	34	613-0054-00	1/4-20 Cage Nut
18	47	619-0010-50	1/4 Flat Washer Black
19	43	618-8064-50	1/4-20 x 5/8 Button Socket C/S
20	14	618-1060-50	1/4-20 X2" Button Hd Black
21	25	613-8073-50	1/4-20 Nylon Insert Locknut BL
22	7	618-2037-50	1/4-20 X1 Button Socket C/S Black
23	6	618-2021-00	5/16" - 18 3/4" Ind Hex Washr Hd - Type F
24	2	735-4000-00	Tailgate Latch Push Rod Left
25	2	618-6062-00	1/2" x 5/8" Soc. Shoulder Bolt
26	2	632-5000-00	1/2 IDx 5/8 x 5/16 OIB Bushing
27	1	780-2065-10	Dump Bed Side-Right-Large UTV
28	1	780-2070-10	Dump Bed Side-Left-Large UTV
29	1	780-2075-10	Tailgate-Large UTV-Black
30	2	786-0014-00	Stop/Tail Light - Large UTV
31	2	739-7000-00	Basket Latch Striker Post
32	2	613-0031-00	Serrated Flange nut
33	4	630-2030-50	10 x 3/4 Pan Philips Tek Screw
34	3	725-4004-00	Spacer, .261 IDx.740 ODx.315 L
35	1	752-1006-00	Dump Bed Tail gate Actuator
36	2	729-1002-00	Buttom Bumper-Tailgate-2500
37	8	618-2082-00	Push Pin Rivet-Bed Seal
38	2	619-4004-00	Striker Post Fender Washer

Bed Assembly 2

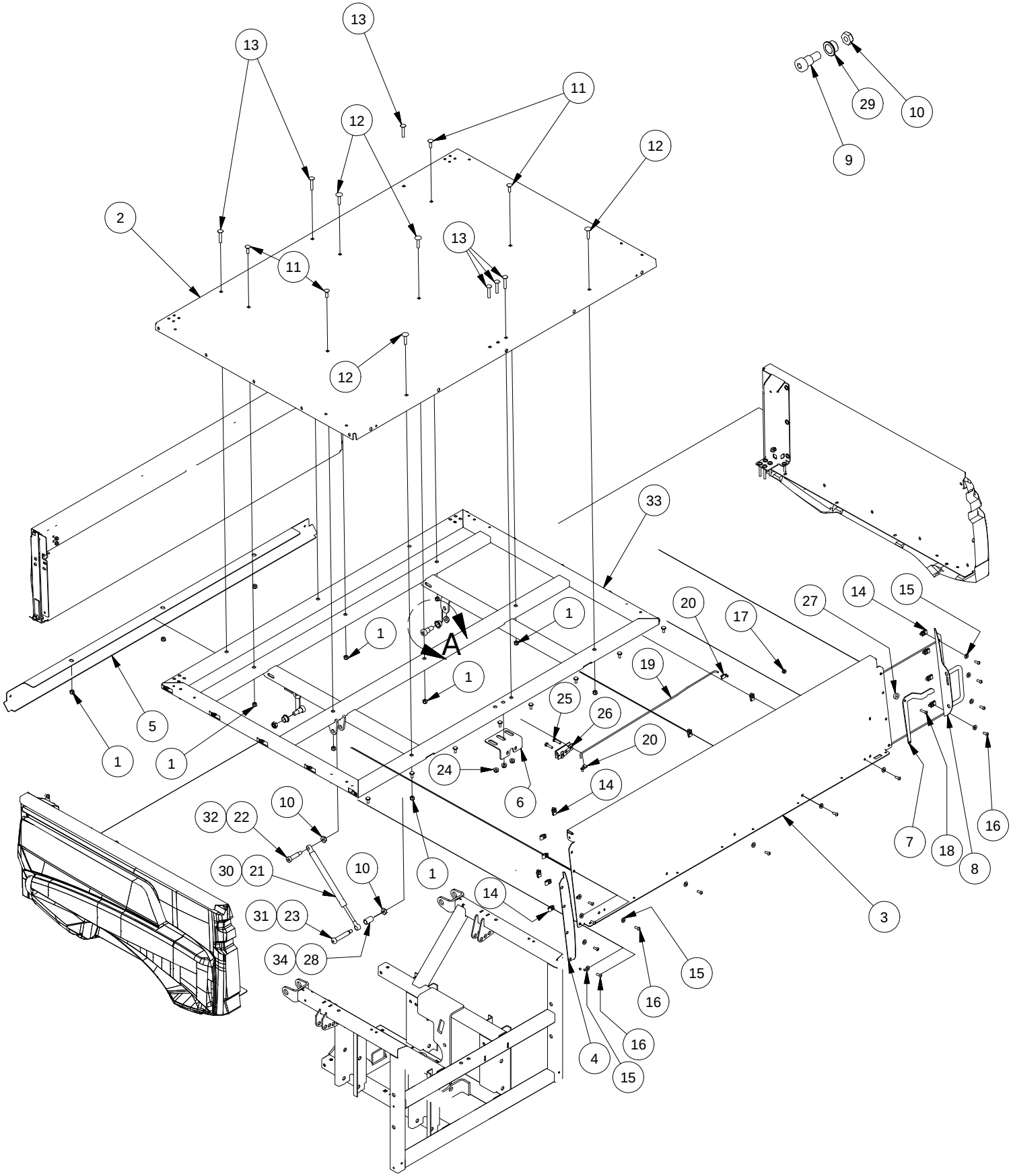

Bed Assembly 2			
ITEM	QTY	PART NUMBER	DESCRIPTION
1	11	613-8047-00	5/16-18 Nylock HEX Nut
2	1	726-4000-20	Standard Bed Bottom
3	1	726-4002-20	Standard Bed Front
4	1	703-4009-20	Right Bed Corner Cover
5	1	703-4004-20	Lower Bed Cover
6	1	739-3406-00	Rotary Latch Bracket-Bed (Base Model Only)
7	1	769-4000-00	Dump Bed Actuator Lever (Base Model Only)
8	1	769-4002-00	Dump Bed Handle Assy
9	2	618-3001-00	5/8 x 5/8 Shoulder Bolt
10	6	613-0040-00	1/2-13 Nylon Insert Jam Locknut
11	4	618-8065-00	5/16-18 x 1 Carriage Bolt
12	4	618-8060-00	5/16-16 x 1 1/2 Carriage Bolts
13	6	618-4708-00	5/16-18 x 1-3/4 Carriage bolt
14	34	613-0054-00	1/4-20 Cage Nut
15	47	619-0010-50	1/4 Flat Washer Black
16	43	618-8064-50	1/4-20 x 5/8 Button Socket C/S
17	25	613-8073-50	1/4-20 Nylon Insert Locknut BL
18	7	618-2037-50	1/4-20 X1 Button Socket C/S Black
19	1	735-4004-00	Dump Bed Latch Push Rod
20	2	772-7000-00	Latch Push Rod Retainer Clip
21	1	735-2000-00	Dump Bed Gas Spring-Large UTV
22	1	618-2020-00	12"X1-1/2" Shoulder Bolt
23	1	618-2047-00	1/2"x 2-1/2" Shoulder Bolt
24	3	613-8049-00	5/16-18 Nylon Insert Flange Nut Zinc Orange Nylon
25	2	618-4007-00	1/4-20 x 1 Grade 5 Hex bolts Zinc
26	1	752-1004-00	Dump Bed Rotary Latch
27	3	725-4004-00	Spacer, .261 IDx.740 ODx.315 L
28	1	725-1009-00	Pedal Spring Spacer LRG UTV 1-1/8 spacer
29	2	632-5052-00	Bronze Bushing - SF- 2024-8
30	1	735-2010-00	Dump Bed Actuator-2500 Series (XD4 Models Only)
31	1	618-6068-00	1/2" X 4" Shoulder Bolt (XD4 Models Only)
32	1	618-5049-00	1/2-13 X 2 GR 5 Hex Bolts Zinc (XD4 Models Only)
33	1	770-3016-00	Standard Bed Frame Assy
34	1	725-1011-00	11/16 x 1/2 x 5/8 Spacer

800cc Left
791-2100-00 Orange
791-2100-10 Gray
791-2100-20 O.D. Green

800cc Right
791-2101-00 Orange
791-2101-10 Gray
791-2101-20 O.D. Green

Decal Warning Cluster-2500
791-2030-00

Load Rating Decal
791-2036-00

4X4 Left
791-2022-00 Orange
791-2022-10 Gray
791-2022-20 O.D. Green

XD4 Right
791-2025-00 Orange
791-2025-10 Gray
791-2025-20 O.D. Green

4X4 Right
791-2023-00 Orange
791-2023-10 Gray
791-2023-20 O.D. Green

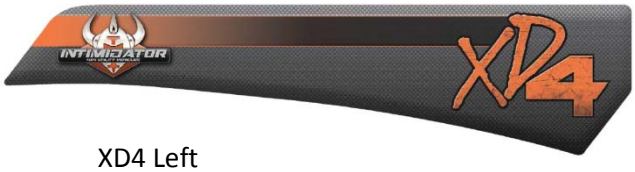

XD4 Left
791-2024-00 Orange
791-2024-10 Gray
791-2024-20 O.D. Green

Dash Intimidator
791-2020-00 Orange
791-2020-10 Gray
791-2020-20 O.D. Green

Tailgate Intimidator
791-2026-00 Orange
791-2026-10 Gray
791-2026-20 O.D. Green

Muffler Hot Warning Label
791-1000-00

ROPS
791-2096-00

Helmet Logo Decal
491-2099-00

Camo 4x4 Decal
791-2097-00

Camo XD4 Decal
791-2098-00

Emissions Control Information

Manufacturer: Intimidator.

Engine Displacement: 799 cc
Engine Family: HITDX.799INT
UTV Permeation Family: HITDPP102BFB

This Vehicle conforms to EPA regulations applicable to 2017 model year new ATVs and is certified to EPA Standards 1.5g/km HC+Nox, 35g/km CO

Engine Exhaust Control System: TWC, HO2S, MFI
Engine Tune Up Specs
Ignition Timing: Non Adjustable CDI
Certified to use Gasoline
Minimum Unleaded Fuel Octane Rating: 87

Made in USA
Date of Manufacture

INTIMIDATOR
4x4 Side-by-Side Utility Vehicles

EPA/CARB Label
791-2112-00

Intimidator **2017**
MODEL: 800 EFI
ENGINE: 799cc, Four Cycle
ENGINE FAMILY: HITDX.799INT
MODEL: Intimidator

The Exhaust Emissions of This Model, Compared To Other Models and US EPA Standards, Is:

This Model 4.0
V
0.0 2.0 4.0 6.0 8.0 10.0
CLEANEST LEAST CLEAN

EPA/CARB Hang Tag
791-2114-00

A WARNING

Improper Use of Off-Highway Vehicles Can Cause Severe Injury or Death

Be Prepared
- Fasten seat belts.
- Wear an approved helmet and protective gear.
- Fasten nets on all positions equipped with them.
- Each rider must be able to sit with back against seat, feet flat on floor [and foot rests], and hands on steering wheel or handhold[s] [where equipped]. Stay completely inside the vehicle.

Drive Responsibly
Avoid loss of control and rollovers:
- Avoid abrupt maneuvers, sideways sliding, skidding, or fishtailing, and never do donuts.
- Slow down before entering a turn.
- Avoid hard acceleration when turning, even from a stop.
- Plan for hills, rough terrain, ruts, and other changes in traction and terrain. Avoid paved surfaces.
- Avoid side hilling (riding across slopes).

Rollovers have caused severe injuries and death, even on flat, open areas.

Be Sure Riders Pay Attention and Plan Ahead
If you think or feel the vehicle may tip or roll, reduce your risk to injury:
- Keep a firm grip on the steering wheel or handholds and brace yourself.
- Do not put any part of your body outside of the vehicle for any reason.

Require Proper Use of Your Vehicle
Do your part to prevent injuries:
- Do not allow careless or reckless driving.
- Make sure operators are 16 or older with a valid driver's license.
- Do not let people drive or ride after using alcohol or drugs.
- Do not allow operation on public roads (unless designated for off-highway vehicle access) -collisions with cars and trucks can occur.
- Do not exceed seating capacity of your vehicle.

DRIVER UNDER 16

Locate and Read Owner's Manual; Follow All Instruction and Warnings

Training Courses To Teach ROV Operation Are Available, Check With Your Dealer.

Check with your dealer regarding state and local ROV Operation Laws.

This Tag Is Only To Be Removed By The Owner After Purchase.

General Warning Tag
791-2119-00

Intimidator Inc. certifies that the ROV complies with the American National Standard for Recreational Off-highway Vehicles.

ANSI/RHOVA 1-2014

RHOVA Decal
791-2120-00