Intimidator UTV Part Manual

800cc XD Sport

www.IntimidatorUTV.com

Revision Date 1-1-17

Table of Contents

Front Suspension Assembly 3

Parts List 4

Lights and Break Assemblies 5

Parts List 6

Seat and Grill Assemblies 7

Parts List 8

Dash Assembly 9

Parts List 10

Plastic Assembly 11

Parts List 12

Radiator Assembly 13

Parts List 14

Engine only Assembly 15

Engine in Frame Assembly 16

Parts List 17

Rear Suspension Assembly 18

Parts List 19

ROPs Assembly 20

Safety Net Assemblies 21

Bed Assembly (1 of 2) 22

Parts List 23

Bed Assembly (2 of 2) 24

Parts List 25

Decals 26-27

Front Suspension Assembly

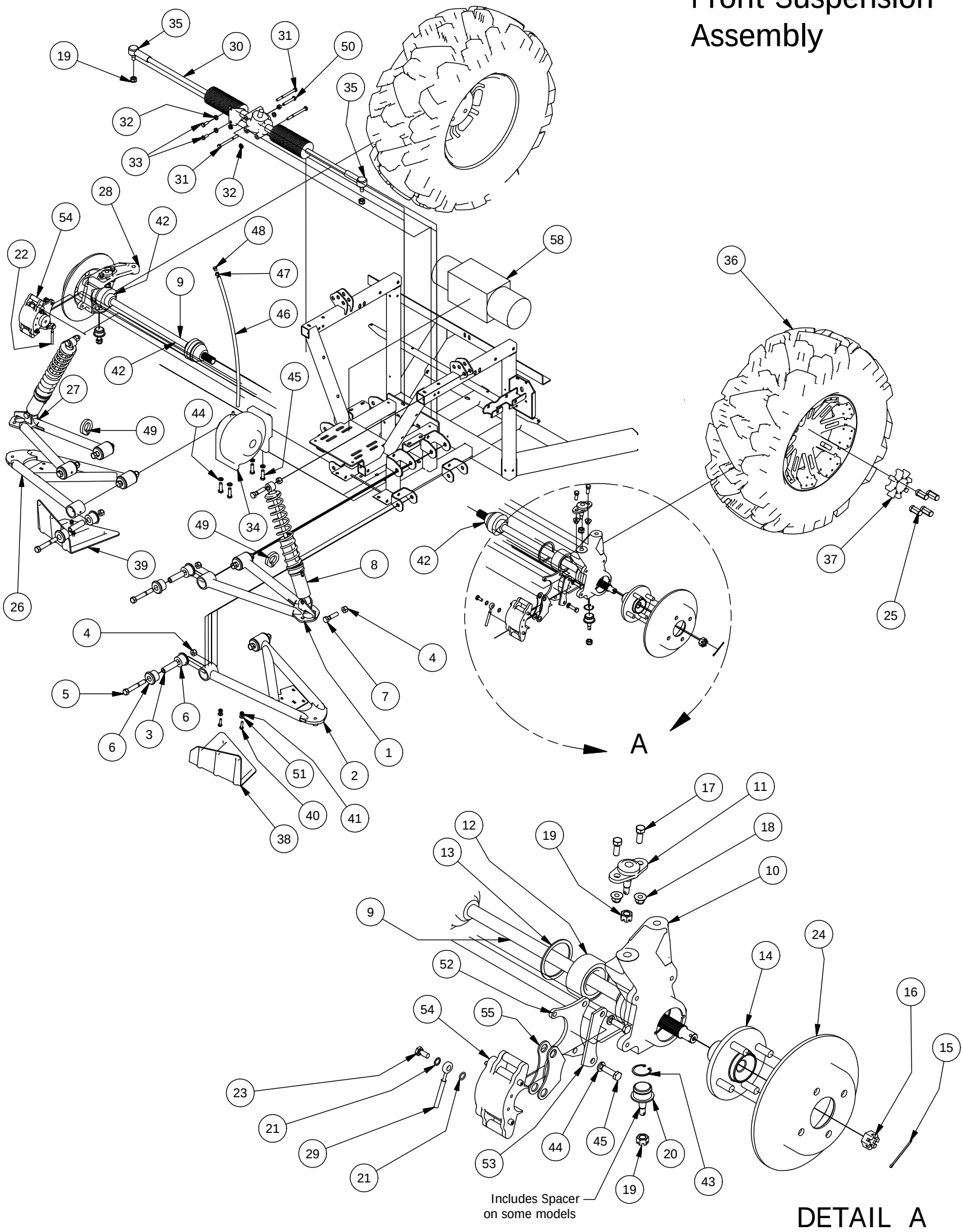

Front Suspension Assembly			
ITEM	QTY	PART NUMBER	DESCRIPTION
1	1	787-3201-00	Left Front Upper A-arm Assy
2	1	787-3203-00	Left Front Lower A-Arm Assy
3	8	732-2001-00	Large MTV A-Arm Bushing Sleeve
4	12	613-6037-00	1/2-13 Nylon Insert Locknut
5	8	618-2006-00	1/2" - 13X3-1/2" Hex Bolt Gr 5
6	16	732-2000-00	Large MTV A-Arm Bushing
7	4	618-5049-00	1/2-13 x 2 GR5 Hex Bolt Zinc
8	2	787-2012-00	ELKA Front Shock
9	2	737-2029-00	Half-Shaft - Front Large UTV
10	1	737-2020-00	Spindle, Left Front-Large UTV
11	2	799-2003-00	Ball Joint-Spindle-Upper High Strength
12	2	710-2002-00	Spindle Bearing LRG UTV
13	2	710-2003-00	Retaining Ring-Spindle Bearing
14	2	786-2000-00	Hub-Large UTV
15	2	765-1016-00	Rear Hub Castle Nut Cotter Pin
16	2	765-1012-00	Rear Hub Castle Nut
17	4	618-6049-00	3/8-16 X 1 GR 5 Hex Bolts Zinc
18	4	613-5202-00	3/8-16 Nylock Flange Nut
19	6	613-2003-00	M12 X 1.25 Castle Nut
20	2	799-2000-00	Ball Joint-Spindle-Lower
21	4	616-1025-00	10 mm copper crush washer
22	1	716-3002-00	Brake Line Front Right-Lg UTV
23	2	616-1015-00	Banjo Bolt M 10mm x 1.0
24	2	716-2000-00	Rotor - Large UTV
25	8	613-0001-00	1/2 Lug Nut-44011- Front
26	1	787-3202-00	Right Front Lower A-Arm Assy
27	1	787-3200-00	Right Front Upper A-Arm Assy
28	1	737-2022-00	Spindle, Right Front-Large UTV
29	1	716-3000-00	Brake Line Front Left-Lg UTV
30	1	731-3000-00	Rack & Pinion, Large MTV
31	3	618-2060-00	5/16-18 X 3 1/2 GR 5 Hex Bolts Zinc
32	5	613-9002-00	5/16-18 Hex Flange Nuts Zinc w/Serations
33	2	618-8063-00	5/16-18 x 3/4 GR 5 Hex bolt Zinc
34	1	756-3004-00	Front Differential-800cc
35	2	710-1014-00	Tie Rod End-Intimidator
36	2	722-4022-00	Front Wheel Assembly
37	2	722-4005-00	XD Sport Wheel Center Cap
38	1	780-2206-00	Left A Frame Guard-2500
39	1	780-2207-00	Right A Frame Guard-2500
40	4	618-4007-00	1/4-20 x 1 Grade 5 Hex bolts Zinc
41	4	613-8073-00	1/4-20 Nylon Insert Locknut Zinc Orange Nylon
42	4	712-3222-00	Half Shaft CV Boot Kit
43	2	799-2001-00	Retaining Ring-Lg MTV Ball Jt
44	8	619-5037-00	3/8 Lockwasher Zinc
45	8	618-5040-00	3/8-16 x 1-1/4 Hex Bolt GR5
46	1	751-1018-00	5/16 ID 7/16 OD Hose
47	1	772-1001-00	5/16 Spring Hose Clamp
48	1	724-1045-00	Breather Plug Threaded
49	2	772-2050-00	Break Line Anchor-1-1/4"
50	1	618-2071-00	5/16-18X 2" Hex Head Cap Screw
51	4	619-0010-50	1/4 Flat Washer Black
58	1	793-7003-00	Warn Vantage 4000 lb. Winch
52	2	639-0054-00	Brake Caliper Brkt-Ausco-Elect
53	2	725-3210-00	Caliper Brake Mount Spacer
54	2	616-1051-00	Hydraulic Caliper
55	2	616-1056-00	Brake Pad

Lights and Brake Assemblies

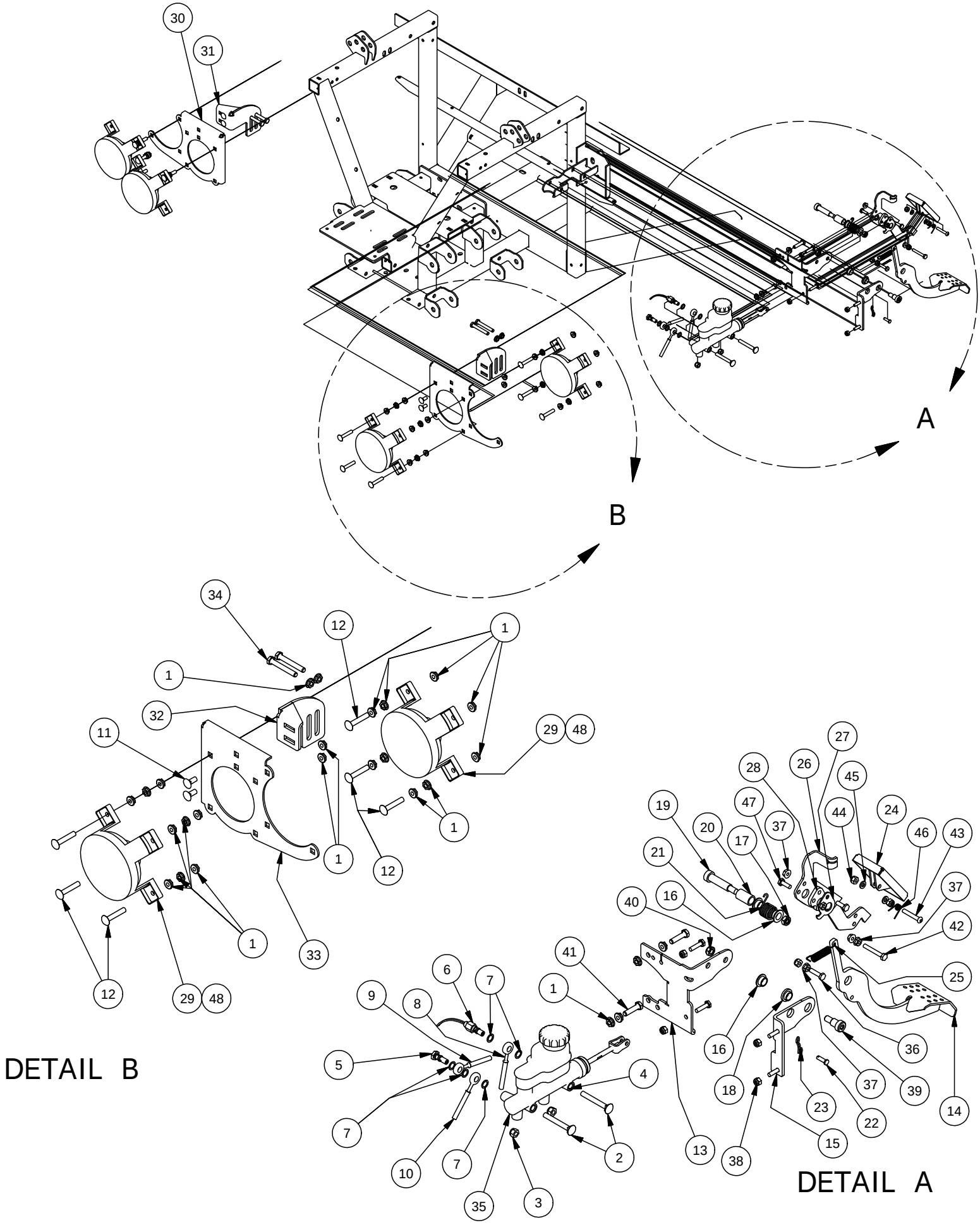

Lights and Brake Assemblies			
ITEM	QTY	PART NUMBER	DESCRIPTION
1	48	613-9002-00	5/16-18 Hex Flange Nuts Zinc w/Serations
2	2	618-2019-00	5/16" - 18 X 2-1/2" Carriage Bolt
3	2	613-8047-00	5/16-18 Nylock HEX Nut
4	1	716-1000-00	Master Cylinder, Dual Cylinder
5	1	716-1017-00	Banjo Bolt-Double-10mm-1.0
6	1	777-1011-00	Brake Switch-Banjo-2012
7	5	616-1025-00	10 mm copper crush washer
8	1	716-3004-00	Brake Line-MC to Rear T-Lg UTV
9	1	716-3002-00	Brake Line Front Left-Lg UTV
10	1	716-3000-00	Brake Line Front Right-Lg UTV
11	4	618-8062-00	5/16-18x3/4 Carriage Bolts Zinc
12	12	618-4708-00	5/16-18 x 1-3/4 Carriage bolt
13	1	739-4202-00	Brake Pedal Bracket-Right-2500
14	1	716-2012-00	Brake Pedal Assy-Large UTV
15	1	739-4200-00	Brake Pedal Bracket Left-2500
16	3	632-5000-00	1/2 IDx 5/8 x 5/16 OIB Bushing
17	1	613-2004-00	3/8"-16 Nyloc Jam Nut
18	1	732-2003-00	Bushing, Oil Impregnated
19	1	618-6064-00	12"X1-3/4" Shoulder Bolt
20	1	725-1009-00	Pedal Spring Spacer LRG UTV 1-1/8 spacer
21	1	734-2002-00	Spring-Accelerator Pedal
22	1	620-1000-00	Clevis Pin, 1/4" x 3/4"
23	1	620-1002-00	Bow Tie Clip
24	1	755-1004-00	Accelerator Pedal Assy-LG UTV
25	1	734-2000-00	Spring-Park Brake
26	1	739-4215-00	Accel Pedal Lever
27	1	739-4216-00	Accel Pedal Spring Anchor
28	1	725-1007-00	Accel Pedal Spacer
29	4	786-0016-00	Headlight-High Beam-Large UTV
30	1	739-4054-00	Head Light Bracket-Right
31	1	739-4058-00	Head Light Bracket Brace-Right
32	1	739-4056-00	Head Light Bracket Brace-Left
33	1	739-4052-00	Head Light Bracket-Left
34	4	618-2034-00	5/16" x 2-1/4" Hex Hd Cap Scr.
35	1	785-1020-00	Break Fluid DOT3 .3 quarts
36	5	618-4007-00	1/4-20 x 1 Grade 5 Hex bolts Zinc
37	5	613-9001-00	1/4-20 Hex Flange Nuts Zinc W/Serrations
38	5	613-8073-00	1/4-20 Nylon Insert Locknut Zinc Orange Nylon
39	1	618-6062-00	1/2" x 5/8" Soc. Shoulder Bolt
40	1	613-2004-00	3/8"-16 Nyloc Jam Nut
41	2	618-2029-00	5/16" x 1-1/4" Hex C/S Gr 5
42	1	618-2016-50	1/4-20 x 1-3/4" Hex Bolt
43	1	618-2038-50	1/4-20 X1-1/2" BH Socket Scr Blk
44	2	613-8073-50	1/4-20 Nylon Insert Locknut BL
45	2	619-4012-00	.255 ID x .500 OD x .075 Thick TFE Washer
46	1	734-2003-00	Spring-Accelerator Pedal Assy
47	2	618-8052-00	1/4-20 x 3/4 Grade 5 Hex bolts Zinc
48	1	788-1012-00	4717 LED Headlight

Seat and Grill Assemblies

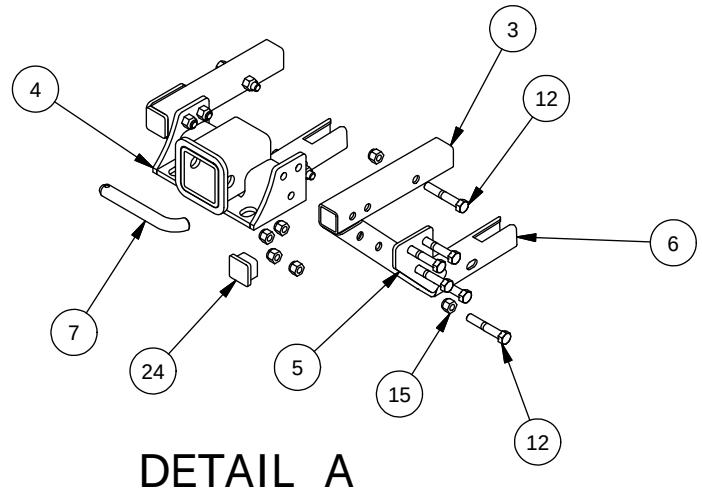

DETAIL A

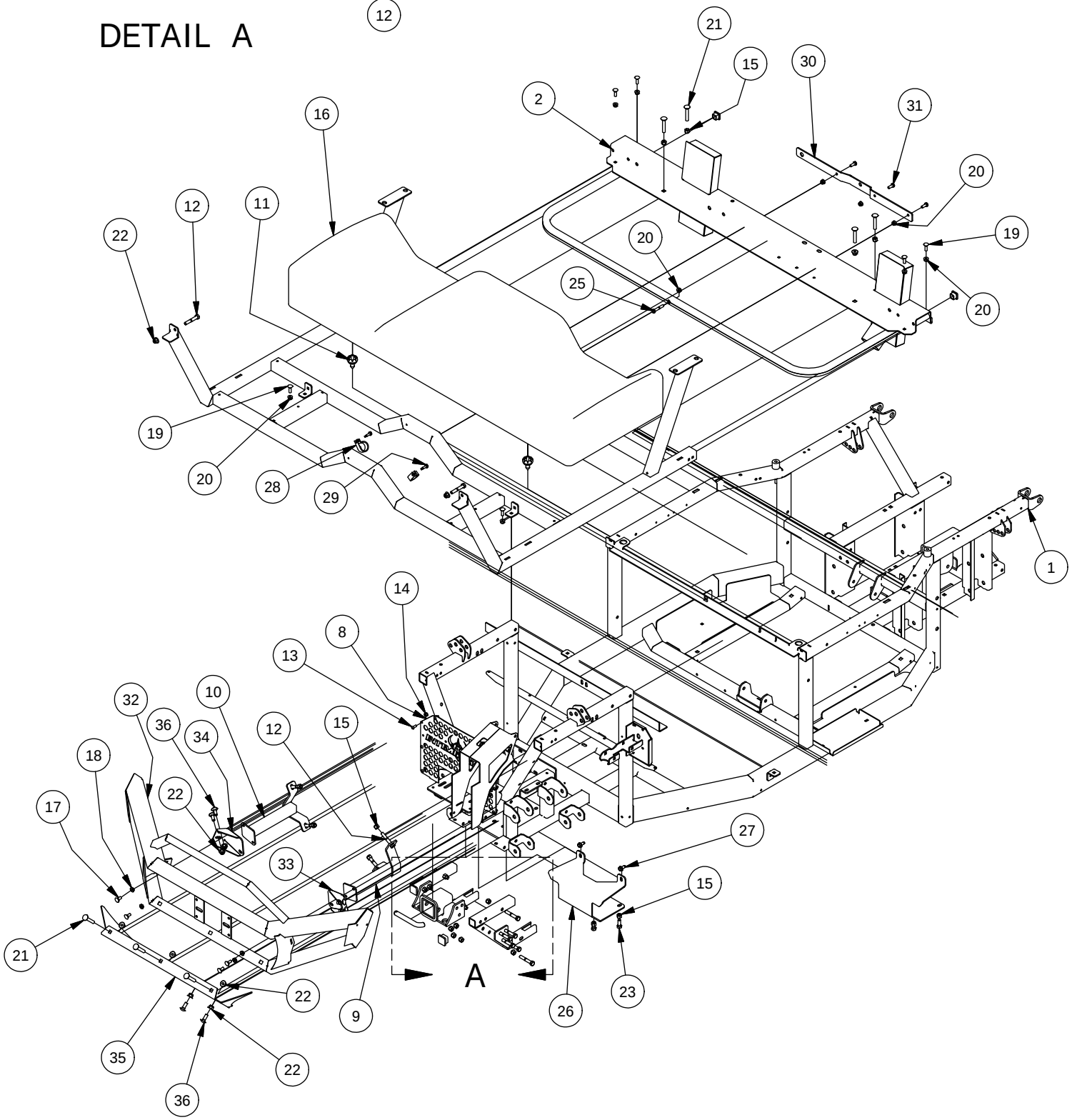

Parts List			
ITEM	QTY	PART NUMBER	DESCRIPTION
1	1	770-3322-00	800cc Single Cab Main Frame Assembly
2	1	770-3014-00	Seat Frame Assy, 800cc
3	2	703-4400-00	Front Receiver Tube Mtg Tube
4	2	793-3210-00	Front Receiver Assembly
5	2	739-4401-00	Front Receiver Gusset Intimidator
6	2	703-4401-00	Front Receiver Bottom Tube Intimidator
7	1	793-3212-00	Hitch Pin
8	1	726-4065-00	Front Grill insert 2015
9	1	739-3220-00	Brush Guard Mtg Brkt-Left
10	1	739-3221-00	Brush Guard Mtg Brkt-Right
11	2	739-2300-00	Seat Pin Latch Assembly
12	18	618-2022-00	3/8" - 16 X 2-1/4" Hex Bolt
13	8	618-8064-50	1/4-20 x 5/8 Button Socket C/S
14	8	613-8073-50	1/4-20 Nylon Insert Locknut BL
15	31	613-5041-00	3/8-16 Nylon Insert Locknut
16	1	771-2016-00	King Ranch Seat Bottom
17	4	618-8062-00	5/16-18x3/4 Carriage Bolts Zinc
18	4	613-9002-00	5/16-18 Hex Flange Nuts Zinc w/Serations
19	6	618-8065-00	5/16-18 x 1 Carriage Bolt
20	12	613-8049-00	5/16-18 Nylon Insert Flange Nut Zinc Orange Nylon
21	7	618-2023-00	3/8"-16 x 2-1/4" Carriage Bolt
22	12	613-5202-00	3/8-16 Nylock Flange Nut
23	4	618-6049-00	3/8-16 X 1 GR 5 Hex Bolts Zinc
24	2	714-1002-00	1-1/4"x1-1/4" Black Tube Plug
25	1	618-8059-00	5/16-18 x 1-3/4 Grade 5 Hex Bolt
26	1	726-3210-00	Brush Guard Skid Plate
27	2	618-2021-00	5/16" - 18 3/4" Ind Hex Washr Hd - Type F
28	2	772-2012-00	1-3/8 inch Loop Clamp
29	2	630-7040-00	1/4 x 1 Hex Head Tek Screw
30	1	739-3409-00	Rotary Latch Bracket-Frame 800cc
31	3	618-8063-00	5/16-18 x 3/4 GR 5 Hex bolt Zinc
32	1	770-3343-00	Intimidator XD Sport Front Bumper Assembly
33	1	739-4179-00	Intimidator XD Sport Front Bumper Top Left Mounting Bracket
34	1	739-4180-00	Intimidator XD Sport Front Bumper Top Right Mounting Bracket
35	1	739-4181-00	Intimidator XD Sport Front Bumper Skid Plate
36	6	618-2011-00	3/8 - 16 X 1" Carriage Bolt

Dash Assembly

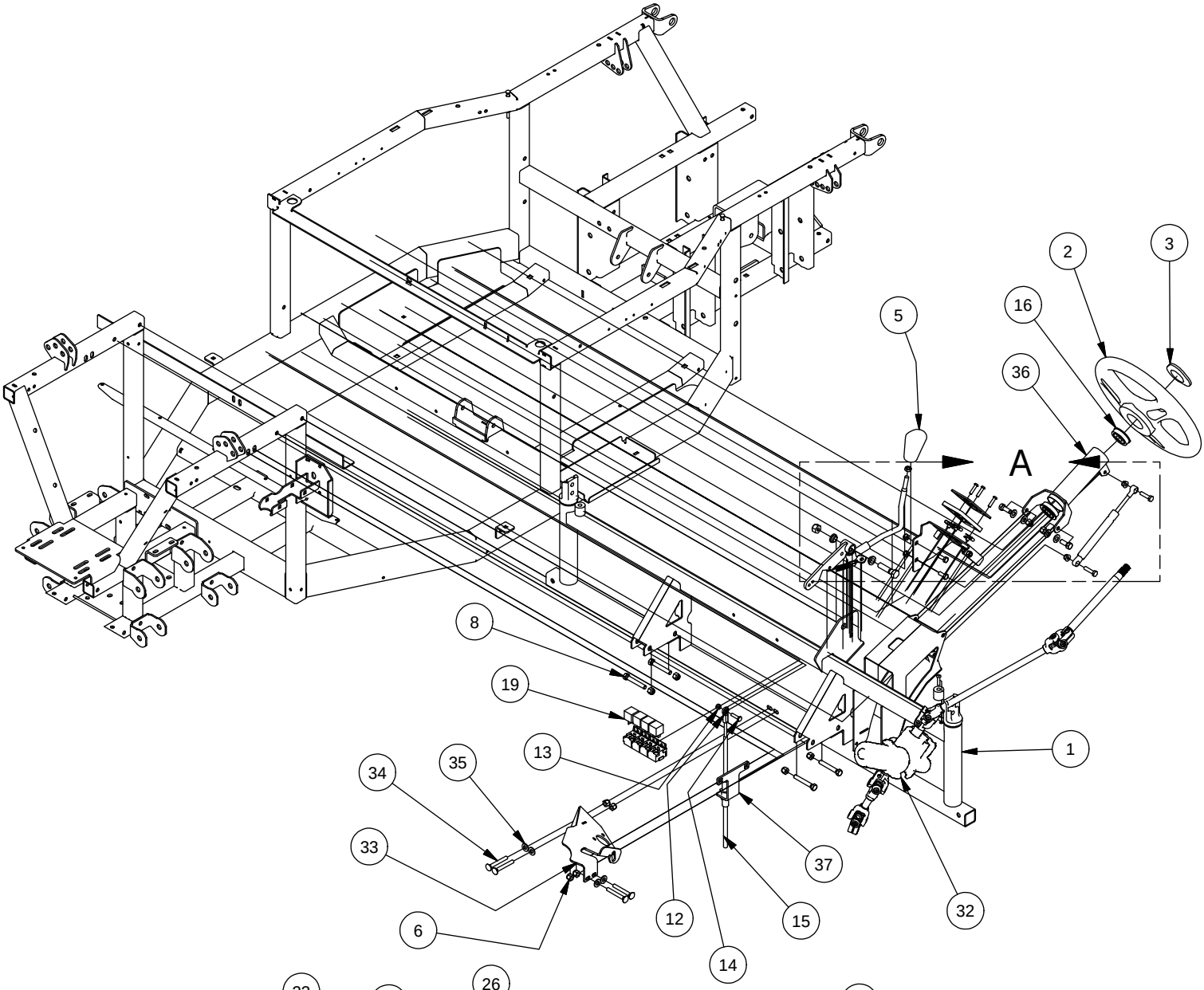

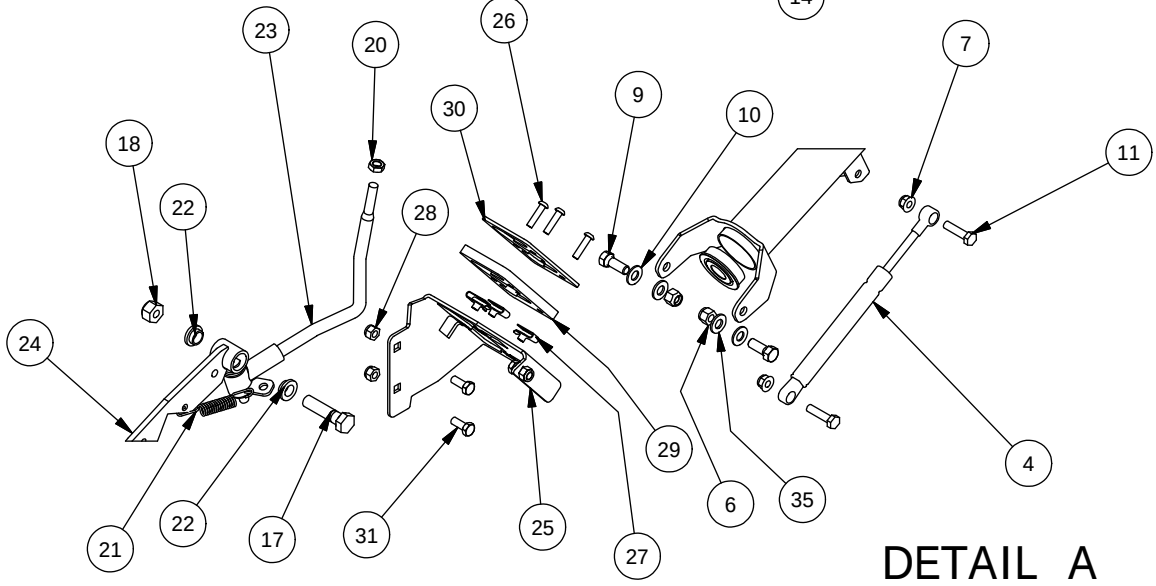

DETAIL A

Dash Assembly			
ITEM	QTY	PART NUMBER	DESCRIPTION
1	1	770-3002-00	Dash Support Assy
2	1	722-2500-00	Steering Wheel Large UTV
3	1	722-2502-00	Steering Wheel Cap-Hurricane
4	1	735-2005-00	Tilt Steering Gas Spring
5	1	745-2001-00	Shift Lever Knob 800cc
6	31	613-5041-00	3/8-16 Nylon Insert Locknut
7	12	613-8049-00	5/16-18 Nylon Insert Flange Nut Zinc Orange Nylon
8	4	618-2069-00	3/8" - 16 X 2-1/2" Hex Hd Cap Screw
9	4	618-6049-00	3/8-16 X 1 GR 5 Hex Bolts Zinc
10	2	619-0012-00	3/8 ID x 1/8 Plastic Washer
11	2	618-1077-00	5/16 x 1-1/4 G8 Zn Hex Bolt
12	1	799-1002-00	1/4-28, Right Hand Thread Heim
13	3	613-8073-00	1/4-20 Nylon Insert Locknut Zinc Orange Nylon
14	1	618-4007-00	1/4-20 x 1 Grade 5 Hex bolts Zinc
15	1	764-2015-00	Gear Shift Cable-800cc Classic
16	1	720-4060-00	Steering Column Bearing
17	1	618-5049-00	1/2-13 x 2 GR5 Hex Bolt Zinc
18	1	613-6037-00	1/2-13 Nylon Insert Locknut
19	4	786-0005-00	12 Volt Cube Relay
20	1	613-6051-00	3/8-24 Hex Nut Zinc
21	1	735-2001-00	800cc Shifter Spring
22	4	732-2003-00	Bushing, Oil Impregnated
23	1	769-3002-00	800cc Shift Lever Assy
24	1	769-3001-00	800cc Transmission Shift Lever Assy
25	1	739-4521-00	800cc Dash Shifter Indicator Plate Mounting Brkt
26	3	618-2037-50	1/4-20 X1 Button Socket C/S Black
27	3	613-0054-00	1/4-20 Cage Nut
28	3	613-8047-00	5/16-18 Nylock HEX Nut
29	1	726-4100-00	800 cc Dash indicator Plastic Plate
30	1	726-4101-60	800cc Dash Shifter Metal Brkt
31	3	618-8063-00	5/16-18 x 3/4 GR 5 Hex bolt Zinc
32	1	786-2026-00	Power Steering
33	1	739-4478-00	Power Steering Brkt
34	4	618-2019-00	5/16" - 18 X 2-1/2" Carriage Bolt
35	6	619-0057-50	3/8 Flat Washer Black Zinc
36	1	731-1200-00	Steering Column Assy- Large UTV
37	1	739-3364-00	Upper Shift Cable Bracket

Plastics Assembly

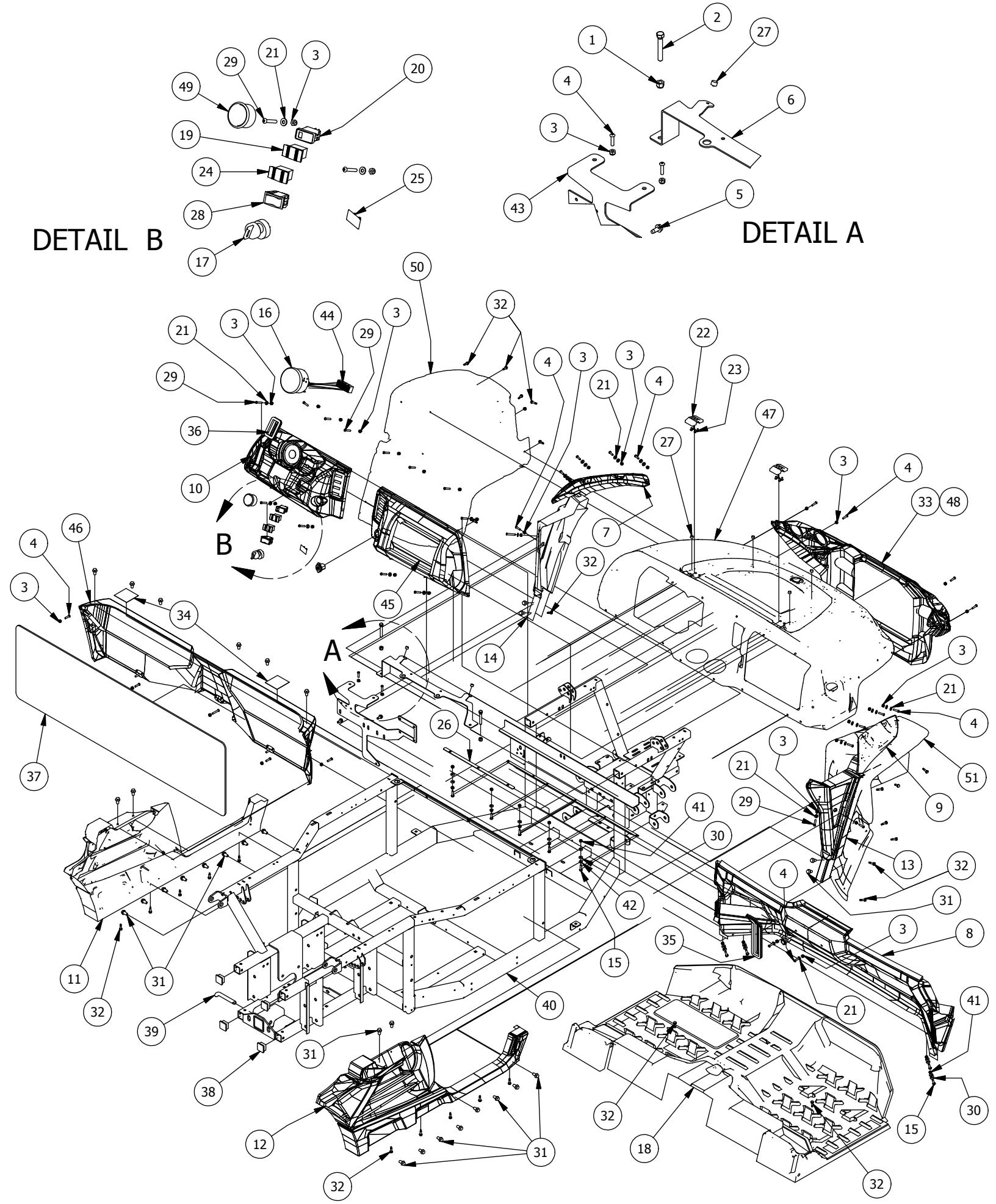

Plastics Assembly			
ITEM	QTY	PART NUMBER	DESCRIPTION
1	2	613-5041-00	3/8-16 Nylon Insert Locknut
2	2	618-2069-00	3/8" - 16 X 2-1/2" Hex Hd Cap Screw
3	27	613-8073-50	1/4-20 Nylon Insert Locknut BL
4	23	618-2037-50	1/4-20 X1 Button Socket C/S Black
5	2	618-2021-00	5/16" - 18 3/4" Ind Hex Washr Hd - Type F
6	1	739-3374-00	Upper Radiator Mounting Brkt
7	1	780-2011-10	Upper Front Fender Flare-Left
8	1	780-2010-10	Front Firewall-Large UTV-Black
9	1	780-2012-10	Upper Front Fender Flare-Right
10	1	780-2039-00	Dash-Large UTV
11	1	780-2030-10	Seat Panel Left-Large UTV-Blk
12	1	780-2025-10	Seat Panel Right-Large UTV-Blk
13	1	780-2050-10	Lower Front Fender Flare-Right
14	1	780-2055-10	Lower Front Fender Flare-Left
15	9	618-4007-00	1/4-20 x 1 Grade 5 Hex bolts Zinc
16	1	786-2020-00	Speedometer/Display Gauge
17	1	777-1000-00	Ignition Switch
18	1	780-2015-10	Floor Board-Large UTV-Black
19	1	786-2034-00	Head Light Hi/off/Low Beam Sw.
20	1	786-2038-00	4WD Switch
21	26	619-0010-50	1/4 Flat Washer Black
22	2	653-5010-00	Hood Hinge
23	8	630-2050-00	M5-.8 x 10 Pan Phil M/S Zinc
24	1	786-2030-00	Differential Lock Switch
25	1	786-2040-00	Panel Plug-Eaton Blank Switch
26	1	726-3242-60	Firewall Mount Brkt
27	6	729-1002-00	Buttom Bumper-Tailgate-2500
28	1	786-2036-00	Dump Bed Up/Down Switch
29	15	618-2038-50	1/4-20 X1-1/2" BH Socket Scr Blk
30	15	619-0023-00	5/16 flat Washer 18-8 SS
31	30	618-6065-00	AUEVCO P/N 17216 HOLE PLUG BLACK
32	29	630-7040-00	1/4 x 1 Hex Head Tek Screw
33	1	780-2060-10	Front Grill-Large UTV-Black
34	2	729-1006-00	Seat Pin Frame Guard-3x3.125"
35	1	736-2002-00	Break Pedal Boot-Lg UTV
36	1	736-2000-00	Shift Lever Boot-Large UTV
37	1	789-0001-00	Kohler 750 CVT Cover Instualton
38	4	714-1004-00	1-1/4"x1-1/4" Black Tube Plug
39	1	793-3212-00	Hitch Pin
40	1	770-3322-00	800cc Single Cab Main Frame Assembly
41	9	613-8073-00	1/4-20 Nylon Insert Locknut Zinc Orange Nylon
42	5	613-9001-00	1/4-20 Hex Flange Nuts Zinc W/Serrations
43	1	739-2057-00	Upper Hood Support Brkt-Diesel-Weber
44	1	786-2018-00	800cc Classic Wiring Harness
45	1	780-2040-00	Glovebox
46	1	780-2020-40	Center Seat Panel-2500-Charo
47	1	759-2000-40	Hood Large UTV-Blk
48	1	780-2061-10	Front Grill-UTV (Base Model Only)
49	1	786-2024-00	Indicator Light
50	1	780-2077-10	Intimidator Left Inner Fender
51	1	780-2078-10	Intimidator Right Inner Fender

Radiator Assembly

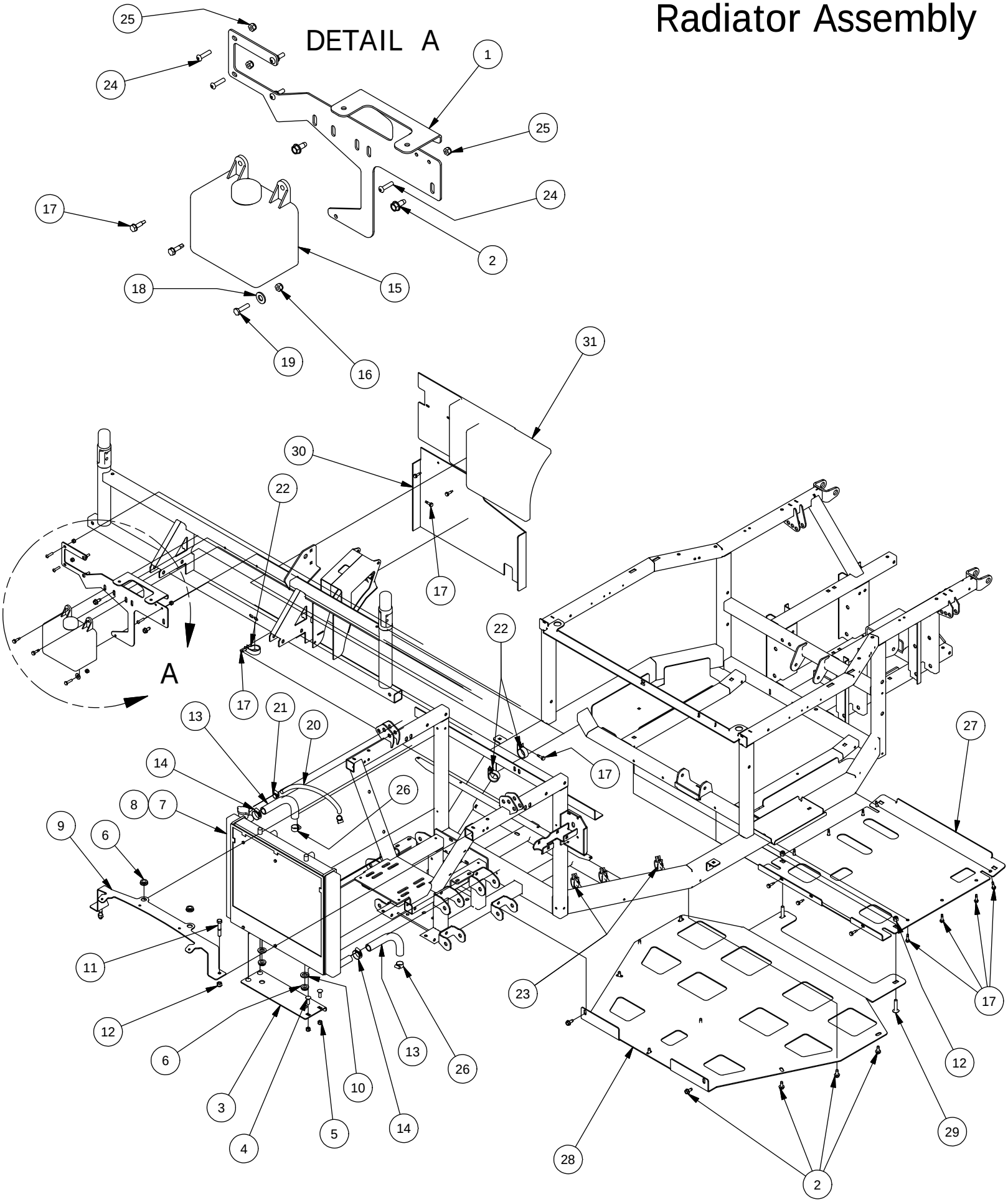

Parts List			
ITEM	QTY	PART NUMBER	DESCRIPTION
1	1	739-2057-00	Upper Hood Support Brkt-Diesel-Weber
2	12	618-2021-00	5/16" - 18 3/4" Ind Hex Washr Hd - Type F
3	1	739-3337-00	Lower Radiator Mounting Brkt
4	4	618-8065-00	5/16-18 x 1 Carriage Bolt
5	4	613-8047-00	5/16-18 Nylock HEX Nut
6	4	719-5000-00	Radiator Grommets
7	1	761-2006-00	RadiatorAssy-Large MTV
8	1	786-2069-00	800cc Fan / Over Temperature Switch, Includes Contacts and Boot (M22 THREADS)
9	1	739-3374-00	Upper Radiator Mounting Brkt
10	2	619-6017-00	.635ID Plastic Washer
11	2	618-2022-00	3/8" - 16 X 2-1/4" Hex Bolt
12	4	613-5041-00	3/8-16 Nylon Insert Locknut
13	2	751-3015-00	Coolant Hose 3/4" ID
14	2	772-2017-00	ABA 22-32mm x 12mm Wide Hose Clamp
15	1	767-2006-00	Radiator Overflow Bottle-2500
16	1	613-8073-00	1/4-20 Nylon Insert Locknut Zinc Orange Nylon
17	23	630-7040-00	1/4 x 1 Hex Head Tek Screw
18	1	619-0057-50	3/8 Flat Washer Black Zinc
19	1	618-4007-00	1/4-20 x 1 Grade 5 Hex bolts Zinc
20	1	751-1013-00	5/16" Hose - High Temp
21	2	672-8067-00	Hose Clamp No. 4 - 7/32 - 5/8
22	3	772-2012-00	1-3/8 inch Loop Clamp
23	3	672-9000-00	1/2 EPDM Cushion Clamp
24	6	618-2037-50	1/4-20 X1 Button Socket C/S Black
25	6	613-8073-50	1/4-20 Nylon Insert Locknut BL
26	2	772-2026-00	15-24mm Screw Clamp
27	1	726-3255-00	800cc Engine Skid Plate
28	1	726-3258-00	800cc Classic Front Skid Plate
29	2	618-2048-00	3/8" -16 x 1-3/4" G8 Carriage Bolt
30	1	780-2222-00	Dashboard Lower Heat Shield PWR Steering
31	1	780-2221-00	Dashboard Upper Heat Shield PWR Steering

Engine only Assembly

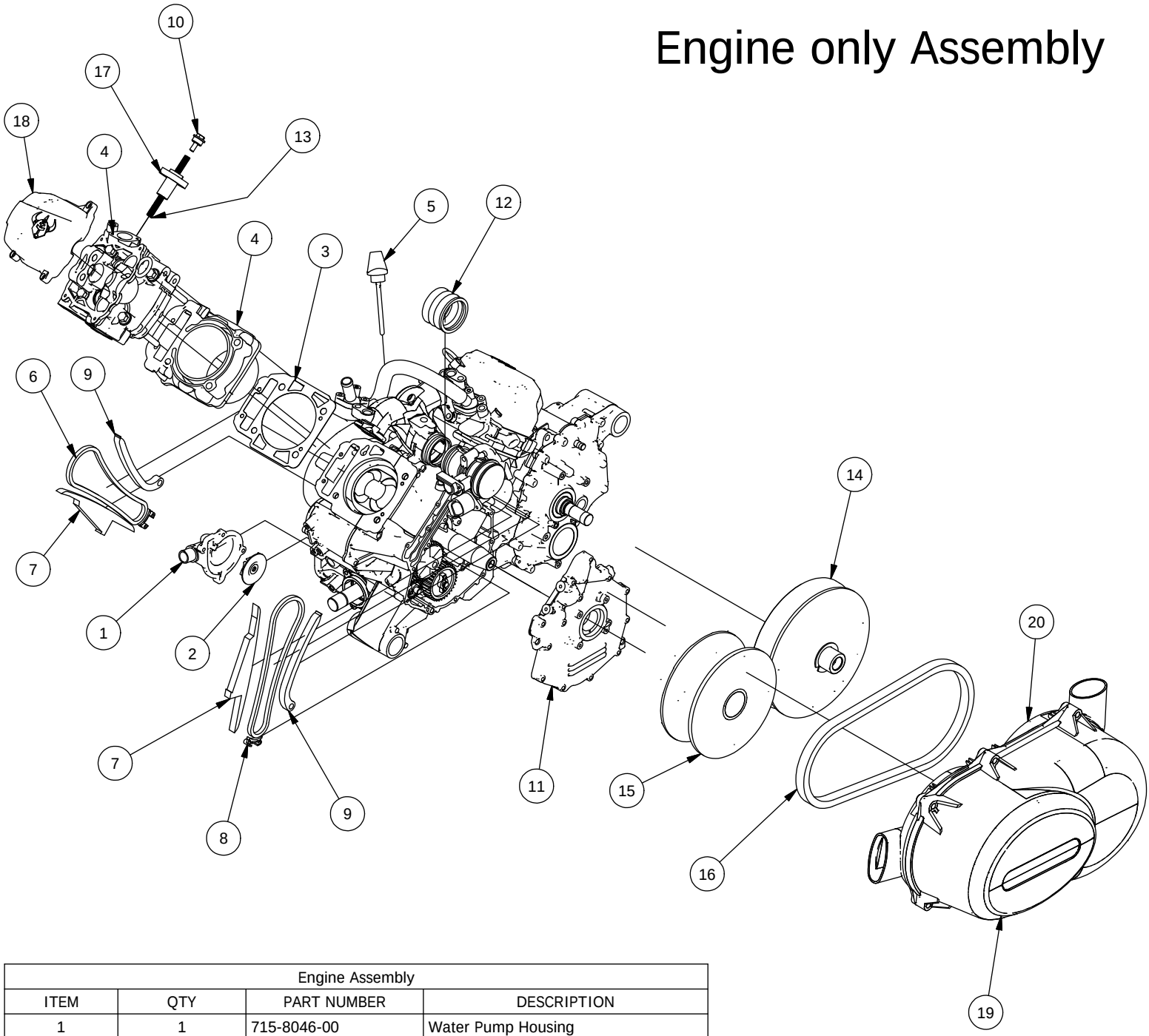

Engine Assembly			
ITEM	QTY	PART NUMBER	DESCRIPTION
1	1	715-8046-00	Water Pump Housing
2	1	715-8045-00	Impeller-Water
3	2	715-8047-00	Gasket Paper
4	1	715-8001-00	Cylinder Front
5	1	715-8035-00	Oil Dipstick
6	2	715-8005-00	Silent Chain 6.35Px112
7	2	715-8003-00	Chain Guide
8	2	715-8004-00	Chain Guide
9	2	715-8002-00	Chain Tension Guide
10	2	715-8007-00	Chain Tensioner Plunger
11	1	715-8020-00	PTO Cover
12	1	751-3013-00	800cc Engine Intake Manifold Hose
13	2	715-8008-00	Spring
14	1	715-8049-00	Driving Wheel
15	1	715-8048-00	Driving Wheel
16	1	715-8050-00	VBelt
17	2	715-8006-00	Chain Tensioner Housing
18	2	715-8065-00	Valve Cover
19	1	715-8193-00	Variator Cover
20	1	715-8212-00	CVT Air Guide

Engine in Frame Assembly

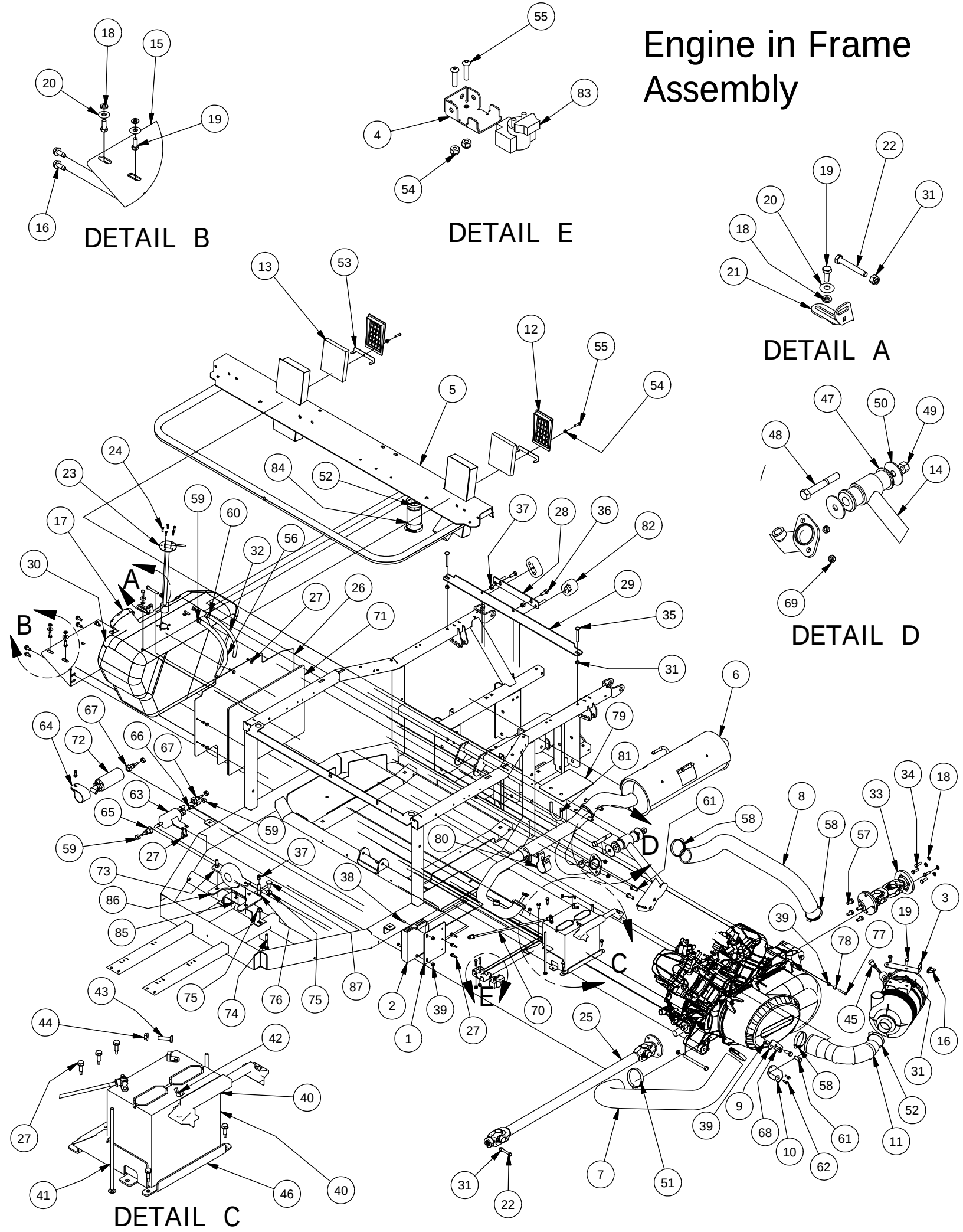

Parts List			
ITEM	QTY	PART NUMBER	DESCRIPTION
1	1	739-3893-00	800cc Rectifire Module Bracket
2	1	715-8200-00	Voltage Regulator
3	1	739-4512-00	800cc Air Filter Bracket
4	1	739-4514-00	800cc Starter Relay Bracket
5	1	770-3014-00	Seat Frame Assy, 800cc
6	1	715-3020-00	Exhaust System Assembly, 800cc
7	1	751-1028-00	800cc CVT Air Inlet Hose
8	1	751-1029-00	800cc CVT Air Outlet Hose
9	1	739-4516-00	800cc Coil Mount Bracket
10	1	739-4510-00	800cc Shift Cable Bracket
11	1	751-3014-00	800cc Engine Throttle Body Intake Hose
12	2	780-2100-00	CVT Plenum Bezel
13	2	763-2100-00	CVT Plenum Filter Media
14	1	770-3339-00	800cc Upper Engine Mount Assembly
15	1	739-2058-00	Lower Fuel Tank Support Brkt
16	6	618-2021-00	5/16" - 18 3/4" Ind Hex Washr Hd - Type F
17	1	767-2002-00	Fuel Tank Cap-Lg UTV-Gas
18	9	619-8051-00	5/16 Lockwasher Zinc
19	7	618-8063-00	5/16-18 x 3/4 GR 5 Hex bolt Zinc
20	5	619-8044-00	5/16 USS Flat Washer Zinc
21	1	739-2059-00	Upper Fuel Tank Support Brkt
22	3	618-2034-00	5/16" x 2-1/4" Hex Hd Cap Scr.
23	1	786-2004-00	Fuel Sender
24	5	618-2105-00	10-32 x 5/8" Indented hex Head machine Screw
25	1	737-2036-00	Front Drive Shaft 800cc Single Cab
26	1	726-3400-00	Gas Tank Heat Shield Classic & Cew
27	17	630-7040-00	1/4 x 1 Hex Head Tek Screw
28	1	770-3340-00	800cc Muffler Mounting Bracket Assembly
29	1	739-4520-00	800 cc Muffler Frame Bracket
30	1	767-2000-00	Gas Tank, Weber/800CC Engine
31	7	613-8047-00	5/16-18 Nylock HEX Nut
32	1	751-1017-00	1/4 Fuel Line - Low Perm
33	1	737-2038-00	Rear Drive shaft 800cc
34	4	618-1080-00	5/16-18 x 1" GR 8 Hex bolt
35	2	618-2019-00	5/16" - 18 X 2-1/2" Carriage Bolt
36	2	618-6049-00	3/8-16 X 1 GR 5 Hex Bolts Zinc
37	8	613-5041-00	3/8-16 Nylon Insert Locknut
38	2	618-5005-00	1/4-20 x 1-1/2 Grade 5 Hex bolts Zinc
39	4	613-8073-00	1/4-20 Nylon Insert Locknut Zinc Orange Nylon
40	1	768-1000-00	12 Volt Battery
41	2	618-1084-00	1/4-20 x 8 Carriage Bolt Zinc
42	2	613-2005-00	1/4-20 Wing Nut Zinc
43	2	618-4007-00	1/4-20 x 1 Grade 5 Hex bolts Zinc
44	2	613-9001-00	1/4-20 Hex Flange Nuts Zinc W/Serrations
45	1	763-3006-00	Filter Restriction Switch
46	1	739-3434-00	800cc UTV Battery Box
47	2	732-2000-00	Large MTV A-Arm Bushing
48	1	618-2006-00	1/2" - 13X3-1/2" Hex Bolt Gr 5
49	1	613-6037-00	1/2-13 Nylon Insert Locknut
50	2	619-0060-00	1/2 Washer Zinc
51	2	772-2025-00	1-15/16 to 2 - 1/2 Hose Clamp
52	3	672-9052-00	1-15/16 to 2 - 1/2 Hose Clamp
53	2	739-3420-00	CVT Enclosure Bracket
54	4	613-8073-50	1/4-20 Nylon Insert Locknut BL
55	4	618-2037-50	1/4-20 X1 Button Socket C/S Black
56	1	751-1019-00	3/8" ID Hose
57	8	618-2099-00	M10 x 1.25 x 20mm Hex Cap Bolt
58	3	772-2023-00	58 mm - 75 mm x 12 mm ABA 1075 Clamp
59	5	772-2021-00	12.5mm - 15mm Two Ear Clamp
60	1	772-2022-00	15mm-18mm Two Ear Clamp
61	4	618-2100-00	M10 x 1.5 x 25MM tap bolt
62	2	618-2065-00	M6 x 1.0 x 16 Flange Hex Bolt
63	1	715-4001-00	Fuel Filter/Regulator
64	1	772-2027-00	800cc Fuel Pump Mount
65	1	773-0001-00	3/8" Female Fuel line Quick Disconnect
66	1	773-0002-00	3/8" Male Fuel Line Quick Disconnect
67	2	773-0003-00	5/16" Female Fuel Line Quick Disconnect
68	1	618-1055-50	1/4-20 x 3 Button C/S Black
69	4	613-8051-00	M8-1.25 Hex Toplock Nut-Zinc
70	1	664-0025-00	39" Battery Cable 2 Gauge
71	1	789-0001-00	Fuel Tank Heat Shield Insulation
72	1	750-1002-00	Electric Fuel Pump, Weber/800CC ENGINE
73	2	720-4065-00	Pillow Block Bearing 800cc Single Cab
74	2	618-2069-00	3/8" - 16 X 2-1/2" Hex Hd Cap Screw
75	4	613-5202-00	3/8-16 Nylock Flange Nut
76	4	618-6050-00	3/8-16 x 1-3/4 Hex Bolt Zinc
77	1	618-2038-50	1/4-20 X1-1/2" BH Socket Scr Blk
78	1	725-3211-00	Spacer for shifter cable at transmission
79	1	726-4510-00	800cc Exhaust Pipe Heat Shield
80	1	715-3022-00	Exhaust Pipe Band Clamp
81	1	715-3023-00	Exhaust Pipe Heat Shield Clamp
82	2	787-3020-00	Muffler Hanger 800 Engine
83	1	715-4000-00	Starter Solenoid, 800cc Engine
84	1	736-2007-00	Air Box to Frame Hose, 2-3/4"L x 2" ID
85	1	739-4523-00	800cc Carrier Bearing Mounting Bracket
86	1	739-4522-00	800cc Carrier Bering Bracket Classic
87	2	618-2011-00	3/8 - 16 X 1" Carriage Bolt

Rear Suspension Assembly

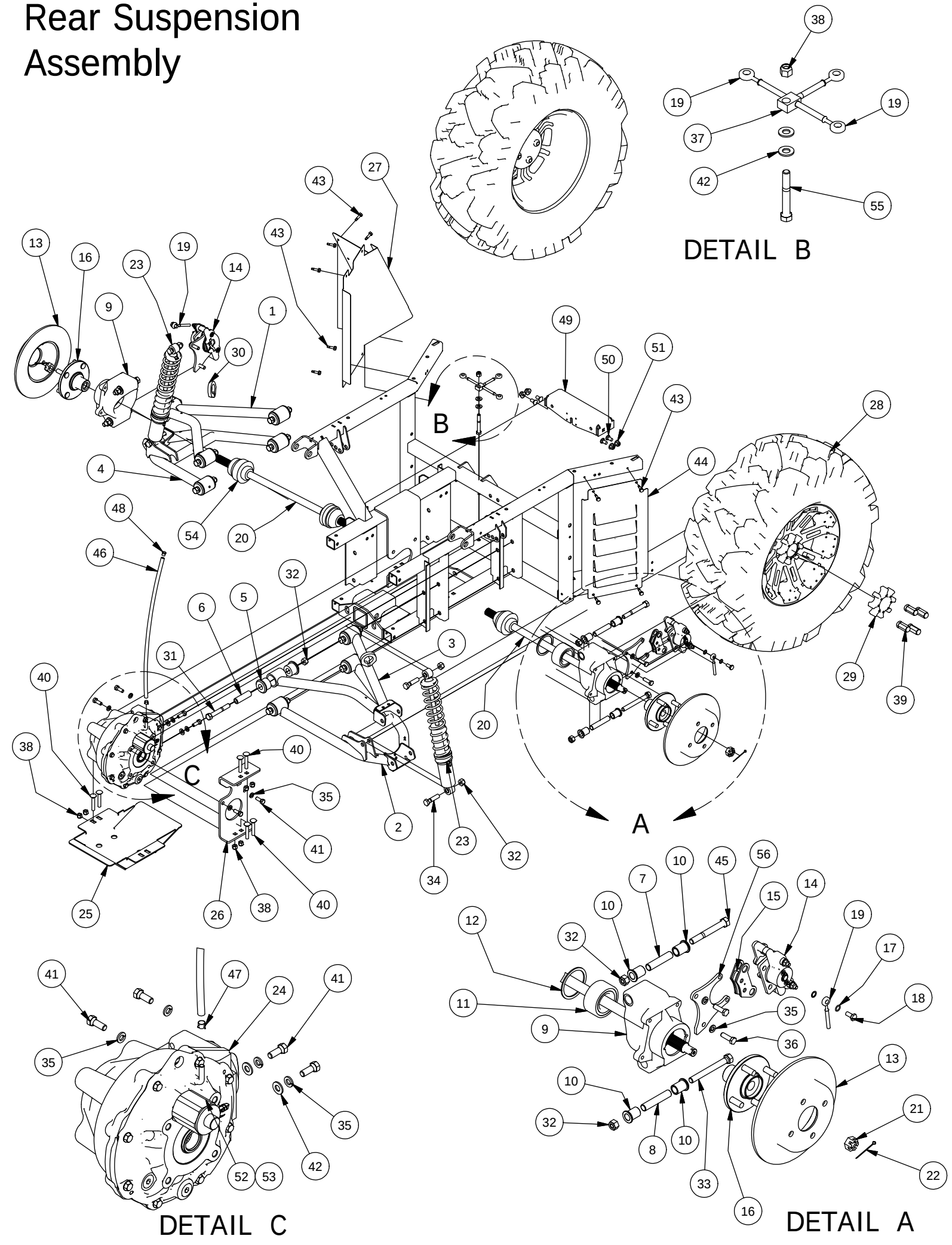

Parts List			
ITEM	QTY	PART NUMBER	DESCRIPTION
1	1	787-3210-00	Extended Left Rear Upper A-arm Assy
2	1	787-3213-00	Extended Right Rear Lower A-Arm Assy
3	1	787-3211-00	Extended Right Rear Upper A-arm assy
4	1	787-3212-00	Extended Left Rear Lower A-arm Assy
5	16	732-2000-00	Large MTV A-Arm Bushing
6	8	732-2001-00	Large MTV A-Arm Bushing Sleeve
7	1	725-3025-00	IRS Upper Spacer
8	1	725-3026-00	IRS Lower Spacer
9	1	787-2000-00	Independent Rear Suspension
10	4	710-2000-00	Flange BUSHING-Large UTV
11	2	710-2002-00	Spindle Bearing LRG UTV
12	2	710-2003-00	Retaining Ring-Spindle Bearing
13	2	716-2000-00	Rotor - Large UTV
14	2	616-1051-00	Hydraulic Caliper
15	1	616-1056-00	Break Pad Kit (2 pads per kit)
16	2	786-2000-00	Hub-Large UTV
17	4	616-1025-00	10 mm copper crush washer
18	2	616-1015-00	Banjo Bolt M 10mm x 1.0
19	2	716-3006-00	Brake Line Rear-Lg UTV
20	2	737-2034-00	Half-Shaft - Rear Large UTV
21	2	765-1012-00	Rear Hub Castle Nut
22	2	765-1016-00	Rear Hub Castle Nut Cotter Pin
23	2	787-2014-00	ELKA Shock Rear
24	1	737-3005-00	Rear Differential, Large MTV
25	1	726-3257-00	800cc Rear Diff Skid Plate
26	1	739-4511-00	800cc Rear Differential Bracket
27	1	726-3229-00	Left Rear Fender Well 800cc
28	2	722-4022-00	Rear Wheel Assembly
29	2	722-4005-00	XD Sport Wheel Center Cap
30	2	772-2050-00	Break Line Anchor-1-1/4"
31	8	618-2006-00	1/2" - 13X3-1/2" Hex Bolt Gr 5
32	16	613-6037-00	1/2-13 Nylon Insert Locknut
33	2	618-2030-00	1/2" -13 x 4.5" Hex Cap Screw
34	4	618-5049-00	1/2-13 x 2 GR5 Hex Bolt Zinc
35	10	619-5037-00	3/8 Lockwasher Zinc
36	4	618-5040-00	3/8-16 x 1-1/4 Hex Bolt GR5
37	1	716-3010-00	Brake Line Tee-Rear-Lg UTV
38	7	613-5041-00	3/8-16 Nylon Insert Locknut
39	8	613-0001-00	XD4 Lug Nut
40	6	618-2023-00	3/8"-16 x 2-1/4" Carriage Bolt
41	6	618-6049-00	3/8-16 X 1 GR 5 Hex Bolts Zinc
42	4	619-0057-50	3/8 Flat Washer Black Zinc
43	10	630-7040-00	1/4 x 1 Hex Head Tek Screw
44	1	726-3260-00	Right Lowered Rear Fender Well
45	2	618-2003-00	1/2" -13 x 4" Hex Cap Screw Gr 5
46	1	751-1018-00	5/16 ID 7/16 OD Hose
47	1	772-1001-00	5/16 Spring Hose Clamp
48	1	724-1045-00	Breather Plug Threaded
49	1	739-3380-00	Rear Diff Cage Top Brace
50	4	618-2068-00	3/8 x 3/4" GR 8 Carr Bolts Zinc
51	4	613-5202-00	3/8-16 Nylock Flange Nut
52	1	737-3006-00	Rear Diff Lock Solenoid
53	1	737-3007-00	Rear Diff Lock Solenoid Spring
54	4	712-3222-00	Half Shaft CV Boot Kit
55	1	618-2078-00	3/8-16 x 2-3/4 Hex C/S GR2 Zinc
56	2	639-0054-00	Brake Caliper Brkt-Ausco-Elect

Rops Assembly

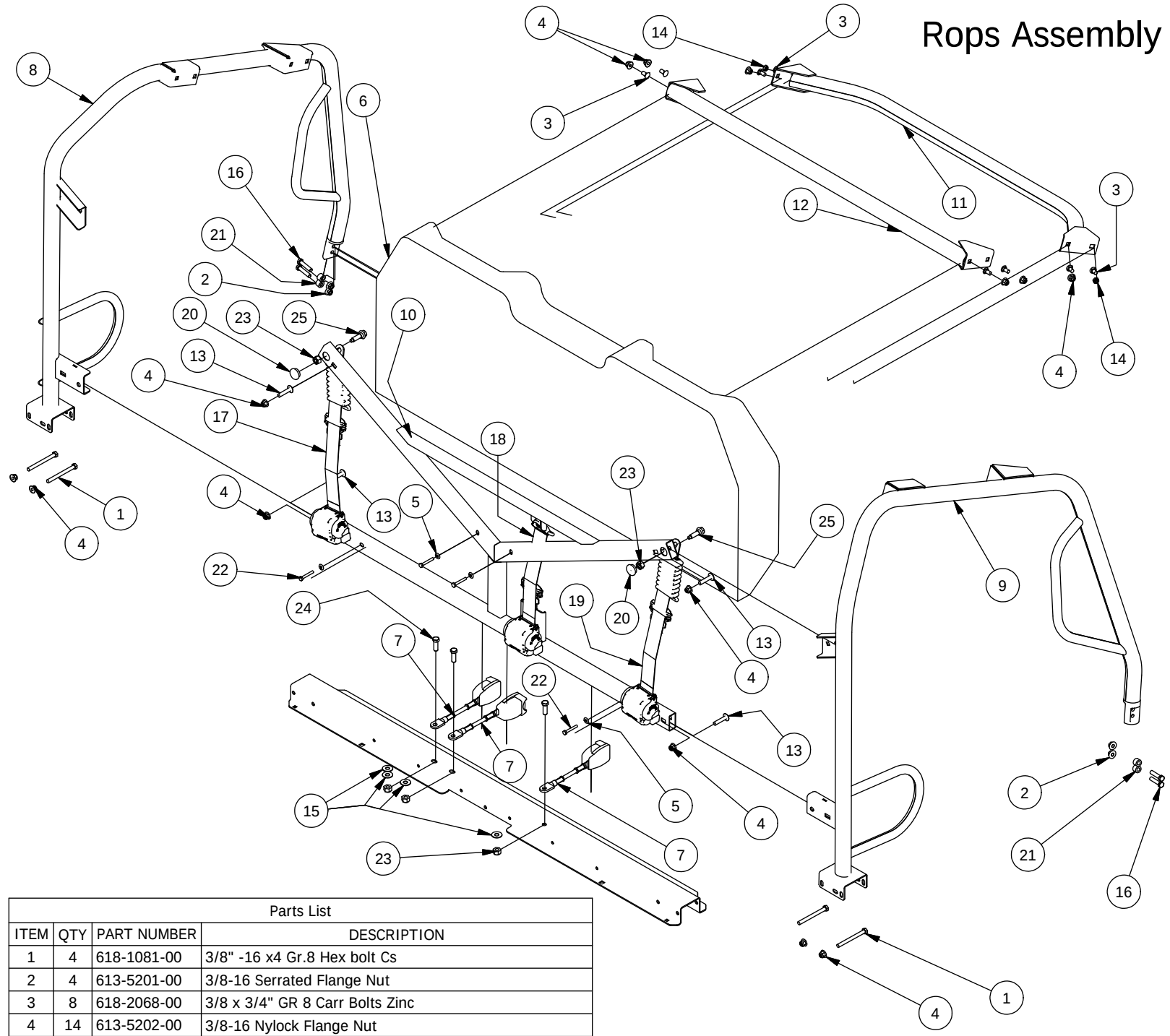

Parts List			
ITEM	QTY	PART NUMBER	DESCRIPTION
1	4	618-1081-00	3/8" -16 x4 Gr.8 Hex bolt Cs
2	4	613-5201-00	3/8-16 Serrated Flange Nut
3	8	618-2068-00	3/8 x 3/4" GR 8 Carr Bolts Zinc
4	14	613-5202-00	3/8-16 Nylock Flange Nut
5	4	619-4008-00	1/4 Lock Washer Zinc
6	1	771-2017-00	King Ranch Seat Back
7	3	671-0030-00	Seat Belt Latch
8	1	780-3012-00	ROPS Left Hoop Assy
9	1	780-3004-00	ROPS Right Hoop Assy
10	1	780-3002-00	ROPS K Brace Assy For Seat back w/ Integral Headrest
11	1	780-3008-00	ROPS Front Cross Brace Assy
12	1	780-3010-00	ROPS Rear Cross Brace Assy
13	4	618-2048-00	3/8" -16 x 1-3/4" G8 Carriage Bolt
14	2	613-2004-00	3/8"-16 Nyloc Jam Nut
15	4	619-8052-00	7/16 USS Flat Washer Zinc
16	4	618-2008-00	3/8"-16X1-3/4" Gr 8 C/S
17	2	771-1017-00	Seat Belt Assy-3 Point-Front Drivers Side
18	1	771-1016-00	Seat Belt Assy-3 Point-Center
19	1	771-1015-00	Seat Belt Assy-3 Point-Passengers Side
20	2	618-6067-00	Heyco 2713 Hole Plug
21	4	725-4005-00	Spacer, .75 O.D. x .400 I.D. x .500"L
22	4	618-2016-50	1/4-20 x 1-3/4" Hex Bolt
23	5	613-0026-00	7/16-20 Nylon Insert Locknut
24	3	618-2097-00	7/16-20 x 1-1/4 GR5 Hex Cap Screw
25	2	618-2096-00	7/16-20 x 1 3/8 GR5 Shoulder Bolt

Safety Nets Assemblies

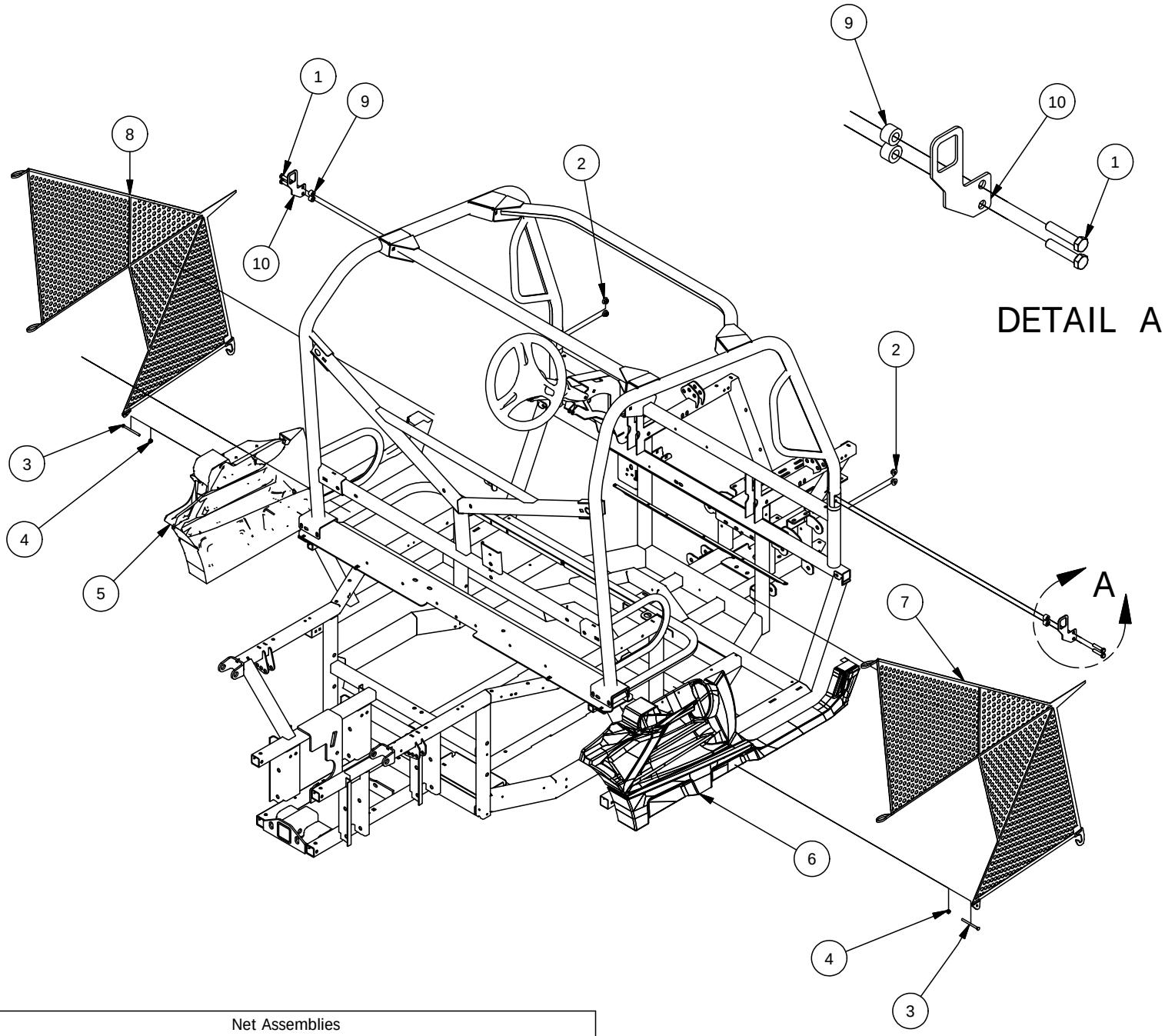

Net Assemblies			
ITEM	QTY	PART NUMBER	DESCRIPTION
1	4	618-2008-00	3/8"-16X1-3/4" Gr 8 C/S
2	4	613-5201-00	3/8-16 Serrated Flange Nut
3	2	618-1055-50	1/4-20 X3" (GRS) Carriage Bolt
4	4	613-8073-50	1/4-20 Nylon Insert Locknut BL
5	1	780-2030-10	Seat Panel Left-Large UTV-Blk
6	1	780-2025-10	Seat Panel Right-Large UTV-Blk
7	1	771-1011-00	Side Net - Right Side
8	1	771-1010-00	Side Net - Left Side
9	4	725-4005-00	Spacer, .75 O.D. x .400 I.D. x .500"L
10	2	739-4069-00	Front side net female buckle Mounting Brkt 2017

Bed Assembly 1

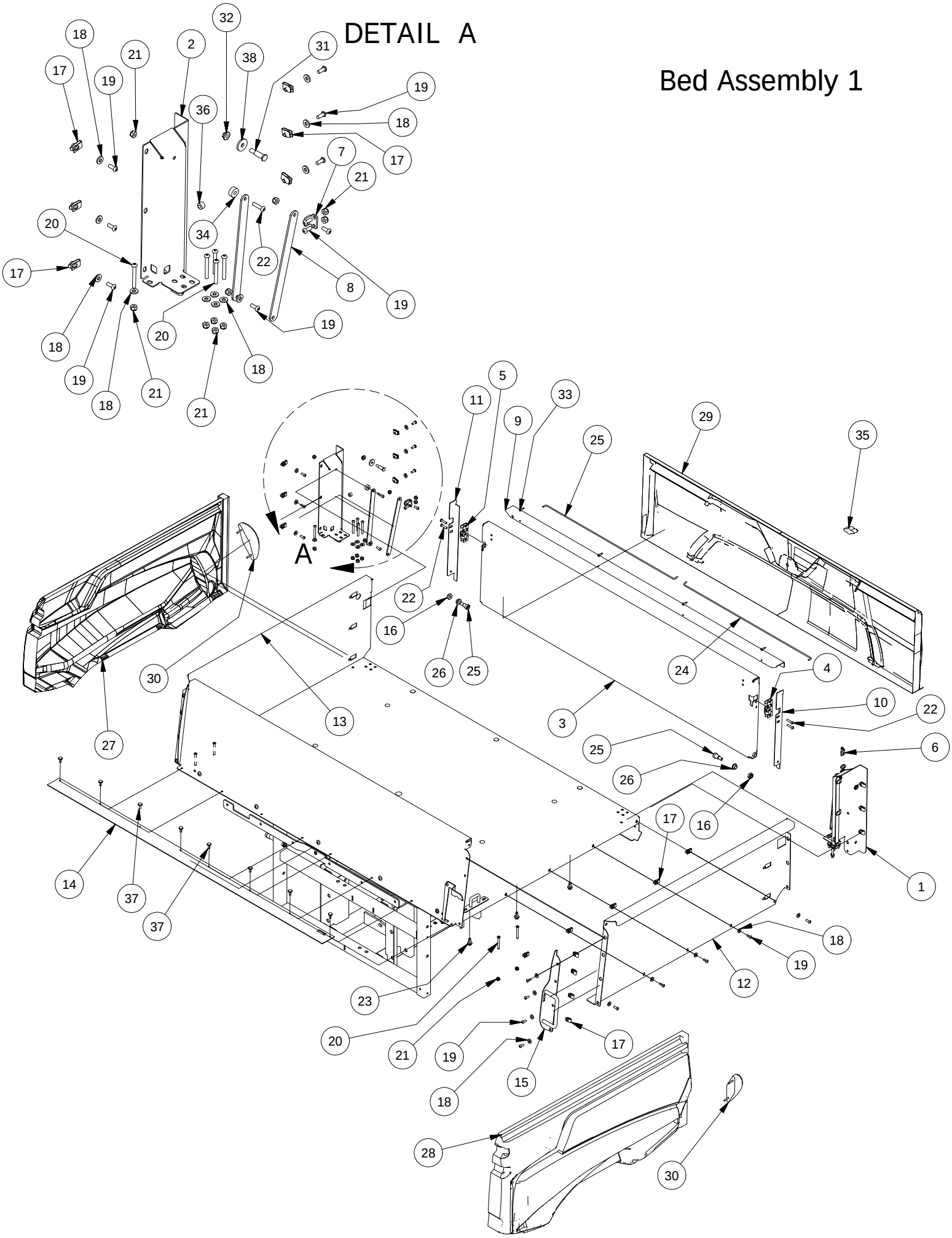

Bed Assembly 1			
ITEM	QTY	PART NUMBER	DESCRIPTION
1	1	703-4008-10	Bed Side Support-Left
2	1	703-4006-10	Bed Side Support-Right
3	1	726-4008-10	Standard Bed Tailgate
4	1	752-1008-00	Tailgate Rotary Latch-Left
5	1	752-1010-00	Tailgate Rotary Latch-Right
6	1	739-4004-60	Tailgate Support Bracket (Left)
7	1	739-4002-60	Tailgate Support Bracket (Right)
8	4	739-4016-60	Tailgate Support Arm-2500
9	1	703-4002-20	Top Tailgate Guard
10	1	703-4014-20	Left TG Side Cover
11	1	703-4012-20	Right TG Side Cover
12	1	726-4004-20	Standard Bed Left Side
13	1	726-4006-20	Standard Bed Right Side
14	1	712-3020-00	Bed Dust Seal
15	1	769-4002-00	Dump Bed Handle Assy
16	6	613-0040-00	1/2-13 Nylon Insert Jam Locknut
17	34	613-0054-00	1/4-20 Cage Nut
18	47	619-0010-50	1/4 Flat Washer Black
19	43	618-8064-50	1/4-20 x 5/8 Button Socket C/S
20	14	618-1060-50	1/4-20 X2" Button Hd Black
21	25	613-8073-50	1/4-20 Nylon Insert Locknut BL
22	7	618-2037-50	1/4-20 X1 Button Socket C/S Black
23	6	618-2021-00	5/16" - 18 3/4" Ind Hex Washr Hd - Type F
24	2	735-4000-00	Tailgate Latch Push Rod Left
25	2	618-6062-00	1/2" x 5/8" Soc. Shoulder Bolt
26	2	632-5000-00	1/2 IDx 5/8 x 5/16 OIB Bushing
27	1	780-2065-10	Dump Bed Side-Right-Large UTV
28	1	780-2070-10	Dump Bed Side-Left-Large UTV
29	1	780-2075-10	Tailgate-Large UTV-Black
30	2	786-0014-00	Stop/Tail Light - Large UTV
31	2	739-7000-00	Basket Latch Striker Post
32	2	613-0031-00	Serrated Flange nut
33	4	630-2030-50	10 x 3/4 Pan Philips Tek Screw
34	3	725-4004-00	Spacer, .261 IDx.740 ODx.315 L
35	1	752-1006-00	Dump Bed Tail gate Actuator
36	2	729-1002-00	Buttom Bumper-Tailgate-2500
37	8	618-2082-00	Push Pin Rivet-Bed Seal
38	2	619-4004-00	Striker Post Fender Washer

Bed Assembly 2

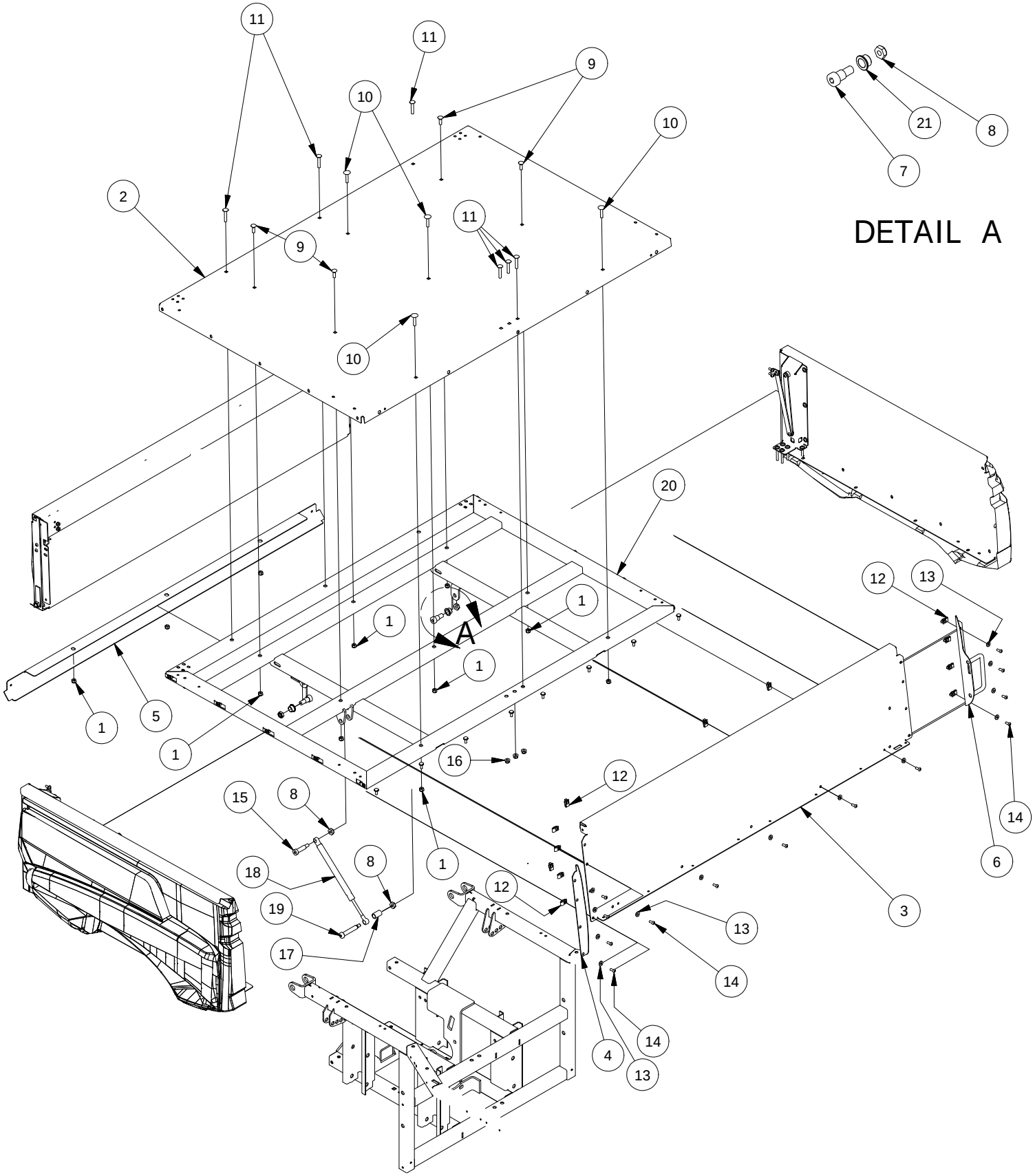

Bed Assembly 2			
ITEM	QTY	PART NUMBER	DESCRIPTION
1	11	613-8047-00	5/16-18 Nylock HEX Nut
2	1	726-4000-10	Standard Bed Bottom
3	1	726-4002-10	Standard Bed Front
4	1	703-4009-10	Right Bed Corner Cover
5	1	703-4004-10	Lower Bed Cover
6	1	769-4002-00	Dump Bed Handle Assy
7	2	618-3001-00	5/8 x 5/8 Shoulder Bolt
8	6	613-0040-00	1/2-13 Nylon Insert Jam Locknut
9	4	618-8065-00	5/16-18 x 1 Carriage Bolt
10	4	618-8060-00	5/16-16 x 1 1/2 Carriage Bolts
11	6	618-4708-00	5/16-18 x 1-3/4 Carriage bolt
12	34	613-0054-00	1/4-20 Cage Nut
13	47	619-0010-50	1/4 Flat Washer Black
14	43	618-8064-50	1/4-20 x 5/8 Button Socket C/S
15	1	618-5049-00	1/2-13 2 GR 5 Hex Bolts Zinc
16	3	613-8049-00	5/16-18 Nylon Insert Flange Nut Zinc Orange Nylon
17	1	725-1009-00	Pedal Spring Spacer LRG UTV 1-1/8 spacer
18	1	735-2010-00	Dump Bed Actuator-2500 Series
19	1	618-6068-00	1/2" X 4" Shoulder Bolt
20	1	770-3016-00	Standard Bed Frame Assy
21	2	632-5052-00	Bronze Bushing - SF- 2024-8

800cc Left
791-2100-10 Gray

800cc Right
791-2101-10 Gray

Decal Warning Cluster-2500
791-2030-00

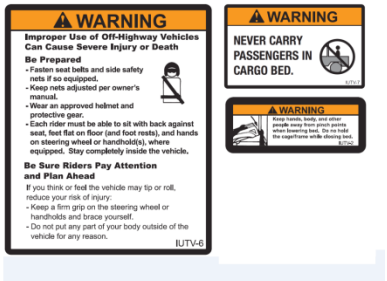

Load Rating Decal
791-2034-00

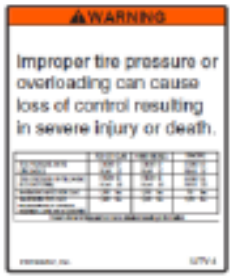

XD Sport Bed Decal Right
791-2117-00

XD Sport Bed Decal Left
791-2116-00

Dash Intimidator
791-2020-10 Gray

Tailgate Intimidator
791-2026-10 Gray

ROPS
791-2096-00

Muffler Hot Warning Label
791-1000-00

Helmet Logo Decal
491-2099-00

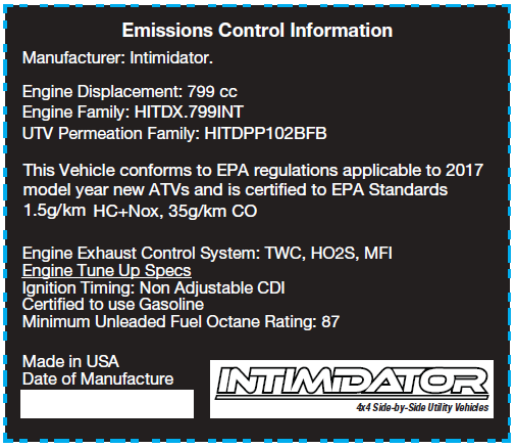

EPA/CARB Label
791-2112-00

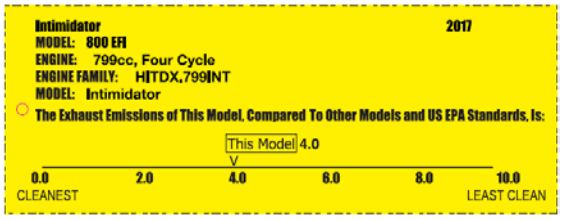

EPA/CARB Hang Tag
791-2114-00

A WARNING

Improper Use of Off-Highway Vehicles Can Cause Severe Injury or Death

Be Prepared

- Fasten seat belts.
- Wear an approved helmet and protective gear.
- Fasten nets on all positions equipped with them.
- Each rider must be able to sit with back against seat, feet flat on floor [and foot rests], and hands on steering wheel or handhold[s] [where equipped]. Stay completely inside the vehicle.

Drive Responsibly

Avoid loss of control and rollovers:

- Avoid abrupt maneuvers, sideways sliding, skidding, or fishtailing, and never do donuts.
- Slow down before entering a turn.
- Avoid hard acceleration when turning, even from a stop.
- Plan for hills, rough terrain, ruts, and other changes in traction and terrain. Avoid paved surfaces.
- Avoid side hilling (riding across slopes).

Rollovers have caused severe injuries and death, even on flat, open areas.

Be Sure Riders Pay Attention and Plan Ahead

If you think or feel the vehicle may tip or roll, reduce your risk to injury:

- Keep a firm grip on the steering wheel or handholds and brace yourself.
- Do not put any part of your body outside of the vehicle for any reason.

Require Proper Use of Your Vehicle

Do your part to prevent injuries:

- Do not allow careless or reckless driving.
- Make sure operators are 16 or older with a valid driver's license.
- Do not let people drive or ride after using alcohol or drugs.
- Do not allow operation on public roads (unless designated for off-highway vehicle access) -collisions with cars and trucks can occur.
- Do not exceed seating capacity of your vehicle.

Locate and Read Owner's Manual; Follow All Instruction and Warnings

Training Courses To Teach ROV Operation Are Available, Check With Your Dealer.

Check with your dealer regarding state and local ROV Operation Laws.

This Tag Is Only To Be Removed By The Owner After Purchase.

General Warning Tag
791-2119-00