# Intimidator UTV Part Manual

## Crew Cab 1000cc Diesel

www.IntimidatorUTV.com

Revision Date 3-1-16

# Table of Contents

**Front Suspension Assembly** .....3

Parts List .....4

**Lights and Break Assemblies** .....5

Parts List .....6

**Seat, Dash, and Grill Assemblies** .....7

Parts List .....8

**Plastic Assembly** .....9

Parts List .....10

**CVT and Radiator Assembly**.....11

Parts List.....12

**Engine Assembly Only** .....13

**Engine Assembly in Frame** .....14

Parts List .....15

**Rear Suspension Assembly** .....16

Parts List .....17

**Roll Cage Assembly** .....18

Parts List .....19

**Safety Net Assemblies** .....20

**Bed Assembly (1 of 2)** .....21

Parts List .....22

**Bed Assembly (2 of 2)** .....23

Parts List .....24

**Decals** .....25

# Front Suspension Assembly

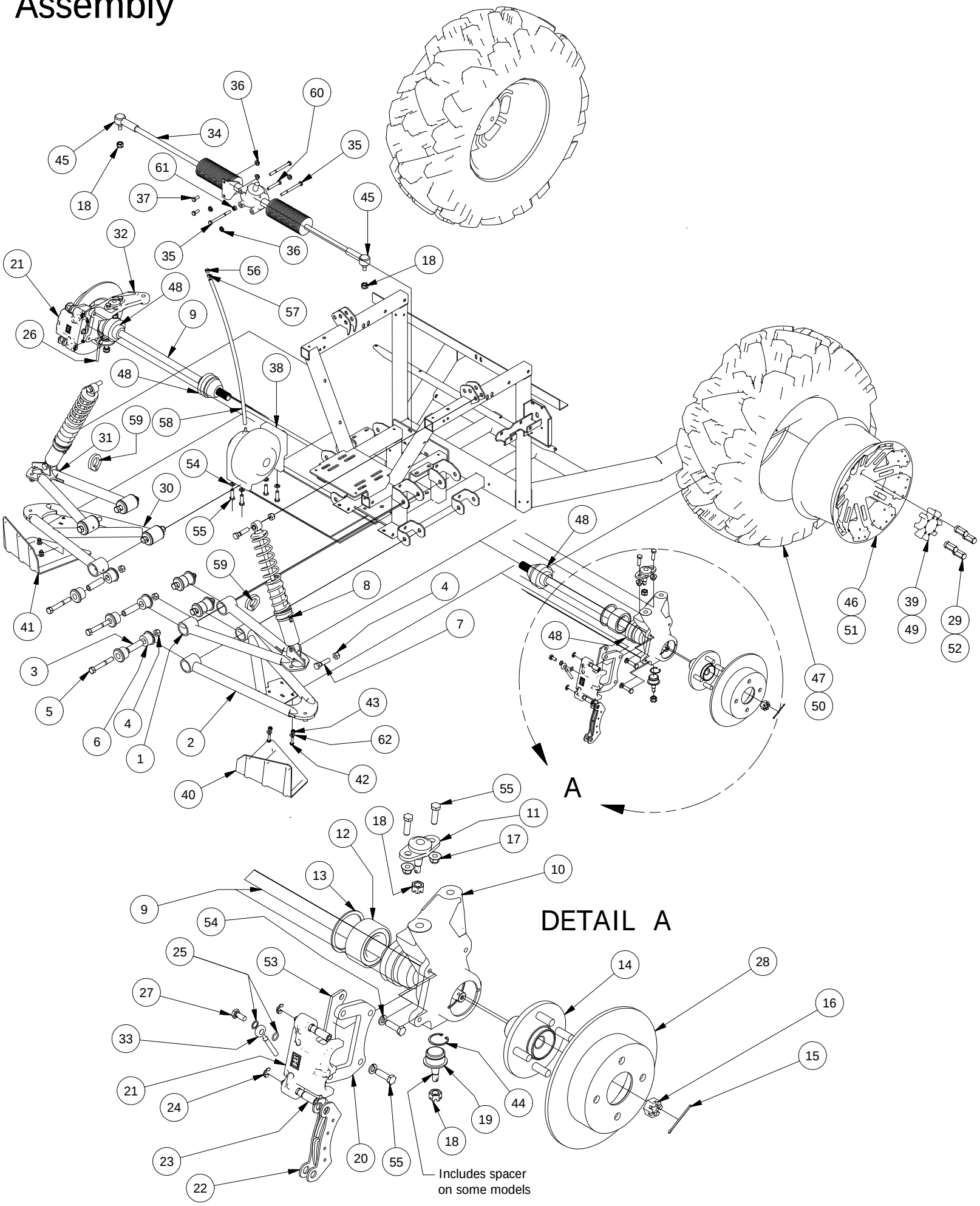

| Parts List | | | |
|---|---|---|---|
| ITEM | QTY | PART NUMBER | DESCRIPTION |
| 1 | 1 | 787-3201-00 | Left Front Upper A-arm Assy |
| 2 | 1 | 787-3203-00 | Left Front Lower A-Arm Assy |
| 3 | 8 | 732-2001-00 | Large MTV A-Arm Bushing Sleeve |
| 4 | 12 | 613-6037-00 | 1/2-13 Nylon Insert Locknut |
| 5 | 8 | 618-2006-00 | 1/2" - 13X3-1/2" Hex Bolt Gr 5 |
| 6 | 16 | 732-2000-00 | Large MTV A-Arm Bushing |
| 7 | 4 | 618-5049-00 | 1/2-13 x 2 GR5 Hex Bolt Zinc |
| 8 | 2 | 787-2005-00 | Front Shock-Kohler 25 Lg UTV |
| 9 | 2 | 737-2029-00 | Half-Shaft - Front Large UTV |
| 10 | 1 | 737-2020-00 | Spindle, Left Front-Large UTV |
| 11 | 2 | 799-2003-00 | Ball Joint-Spindle-Upper High Strength |
| 12 | 2 | 710-2002-00 | Spindle Bearing LRG UTV |
| 13 | 2 | 710-2003-00 | Retaining Ring-Spindle Bearing |
| 14 | 2 | 786-2000-00 | Hub-Large UTV |
| 15 | 2 | 765-1016-00 | Rear Hub Castle Nut Cotter Pin |
| 16 | 2 | 765-1012-00 | Rear Hub Castle Nut |
| 17 | 4 | 613-5202-00 | 3/8-16 Nylock Flange Nut |
| 18 | 6 | 613-2003-00 | M12 X 1.25 Castle Nut |
| 19 | 2 | 799-2000-00 | Ball Joint-Spindle-Lower |
| 20 | 2 | 739-2050-60 | Brake Caliper Brkt-Adrenalin |
| 21 | 2 | 716-2005-00 | Brake Caliper Assy-Large UTV |
| 22 | 4 | 716-2006-00 | Brake Pad |
| 23 | 2 | 716-2007-00 | Brake Caliper Slide Pin |
| 24 | 2 | 716-2008-00 | Caliper Assy Snap Ring-Adrenalin |
| 25 | 4 | 616-1025-00 | 10 mm copper crush washer |
| 26 | 1 | 716-3000-00 | Brake Line Front Left-Lg UTV |
| 27 | 2 | 616-1015-00 | Banjo Bolt M 10mm x 1.0 |
| 28 | 2 | 716-2000-00 | Rotor - Large UTV |
| 29 | 8 | 613-0001-00 | 1/2 Lug Nut-44011- Front |
| 30 | 1 | 787-3202-00 | Right Front Lower A-Arm Assy |
| 31 | 1 | 787-3200-00 | Right Front Upper A-Arm Assy |
| 32 | 1 | 737-2022-00 | Spindle, Right Front-Large UTV |
| 33 | 1 | 716-3002-00 | Brake Line Front Right-Lg UTV |
| 34 | 1 | 731-3000-00 | Rack & Pinion, Large MTV |
| 35 | 3 | 618-2060-00 | 5/16-18 X 3 1/2 GR 5 Hex Bolts Zinc |
| 36 | 5 | 613-9002-00 | 5/16-18 Hex Flange Nuts Zinc w/Serations |
| 37 | 2 | 618-8063-00 | 5/16-18 x 3/4 GR 5 Hex bolt Zinc |
| 38 | 1 | 756-3000-00 | Front Differential-Larg UTV |
| 39 | 2 | 722-4004-00 | XD4 Wheel Center Cap |
| 40 | 1 | 780-2206-00 | Left A Frame Guard-2500 |
| 41 | 1 | 780-2207-00 | Right A Frame Guard-2500 |
| 42 | 4 | 618-4007-00 | 1/4-20 x 1 Grade 5 Hex bolts Zinc |
| 43 | 4 | 613-8073-50 | 1/4-20 Nylon Insert Locknut BL |
| 44 | 2 | 799-2001-00 | Retaining Ring-Lg MTV Ball Jt |
| 45 | 2 | 710-1014-00 | Tire Rod End-Intimidator |
| 46 | 2 | 722-4000-00 | XD4 Front Wheel |
| 47 | 2 | 722-4106-00 | XD4 Front Tire |
| 48 | 4 | 712-3222-00 | Half Shaft CV Boot Kit |
| 49 | 2 | 722-4110-00 | Base Wheel Center Cap |
| 50 | 2 | 722-4112-00 | Base Model Front Tire |
| 51 | 2 | 722-4006-00 | Base Model Front Wheel |
| 52 | 8 | 713-1012-50 | Open End Lug Nut-Black (Base Model Only) |
| 53 | 2 | 725-3210-60 | Caliper Brake Mount Spacer |
| 54 | 8 | 619-5037-00 | 3/8 Lockwasher Zinc |
| 55 | 12 | 618-5040-00 | 3/8-16 x 1-1/4 Hex Bolt GR5 |
| 56 | 1 | 724-1045-00 | Breather Plug Threaded |
| 57 | 1 | 772-1001-00 | 5/16 Spring Hose Clamp |
| 58 | 1 | 751-1018-00 | 5/16 ID 7/16 OD Hose |
| 59 | 2 | 772-2050-00 | Break Line Anchor-1-1/4" |
| 60 | 1 | 618-2071-00 | 5/16-18X 2" Hex Head Cap Screw |
| 61 | 1 | 613-8047-00 | 5/16-18 Nylock HEX Nut |
| 62 | 4 | 619-0010-50 | 1/4 Flat Washer Black |

# Lights and Brake Assemblies

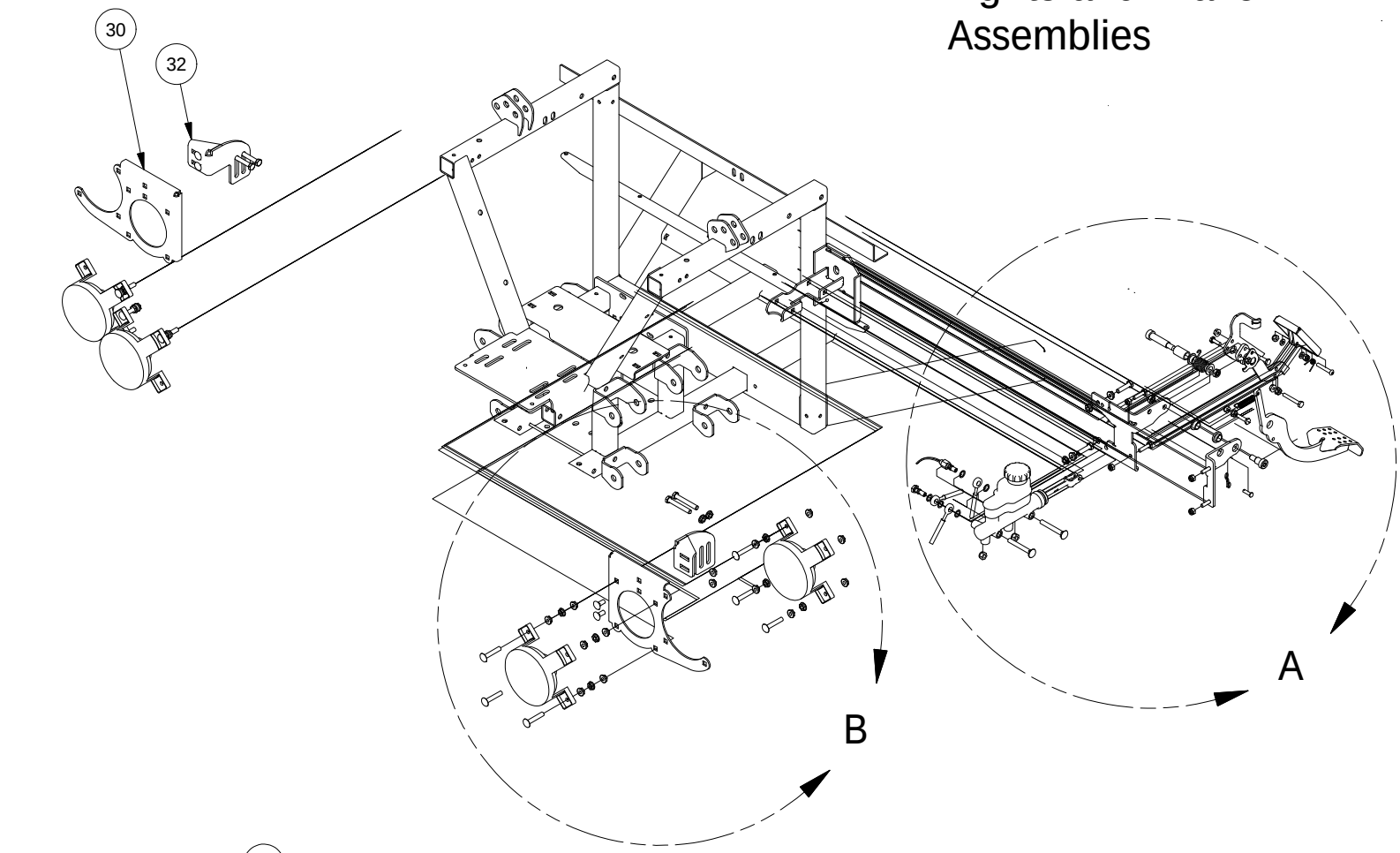


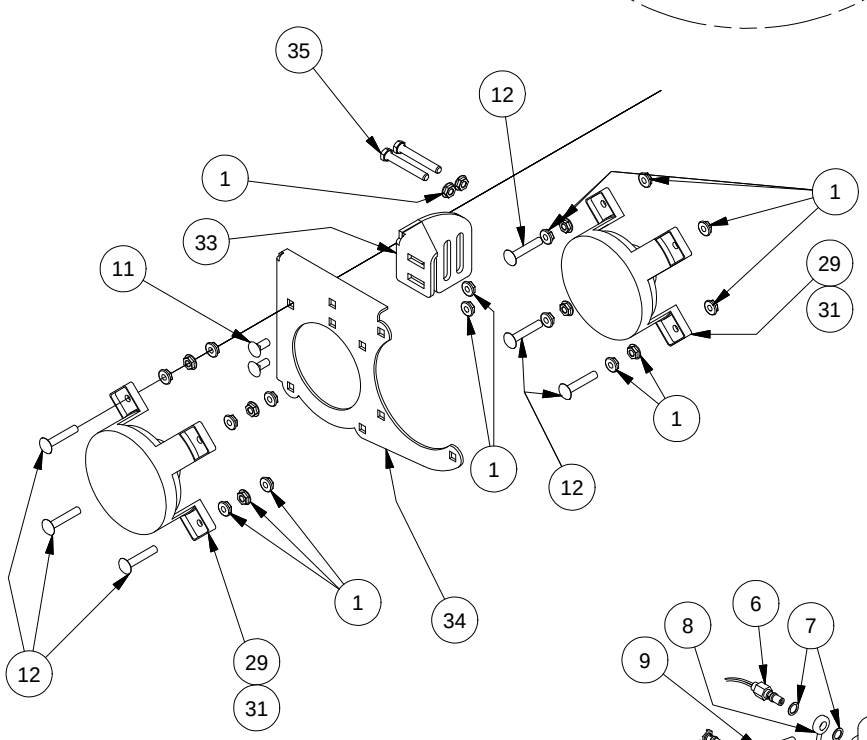


DETAIL B

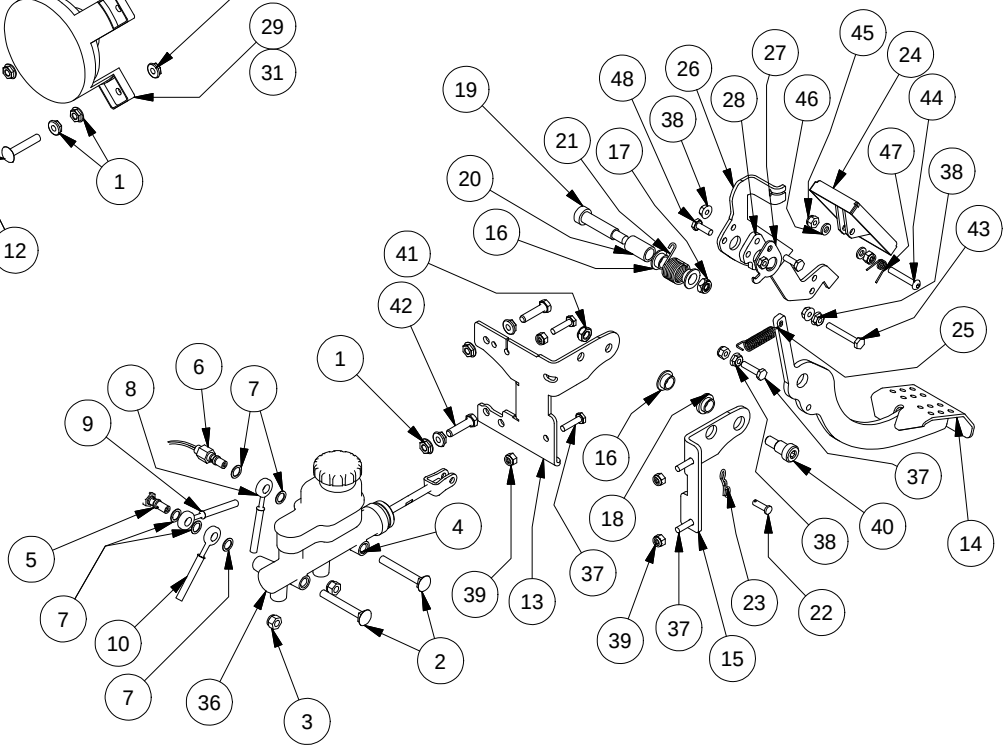


DETAIL A

| Parts List | | | |
|---|---|---|---|
| ITEM | QTY | PART NUMBER | DESCRIPTION |
| 1 | 48 | 613-9002-00 | 5/16-18 Hex Flange Nuts Zinc w/Serations |
| 2 | 2 | 618-2019-00 | 5/16" - 18 X 2-1/2" Carriage Bolt |
| 3 | 2 | 613-8047-00 | 5/16-18 Nylock HEX Nut |
| 4 | 1 | 716-1000-00 | Master Cylinder, Dual Cylinder |
| 5 | 1 | 716-1017-00 | Banjo Bolt-Double-10mm-1.0 |
| 6 | 1 | 777-1011-00 | Brake Switch-Banjo-2012 |
| 7 | 5 | 616-1025-00 | 10 mm copper crush washer |
| 8 | 1 | 716-3004-00 | Brake Line-MC to Rear T-Lg UTV |
| 9 | 1 | 716-3002-00 | Brake Line Front Right-Lg UTV |
| 10 | 1 | 716-3000-00 | Brake Line Front Left-Lg UTV |
| 11 | 4 | 618-8062-00 | 5/16-18x3/4 Carriage Bolts Zinc |
| 12 | 12 | 618-4708-00 | 5/16-18 x 1-3/4 Carriage bolt |
| 13 | 1 | 739-4202-00 | Brake Pedal Bracket-Right-2500 |
| 14 | 1 | 716-2012-00 | Brake Pedal Assy-Large UTV |
| 15 | 1 | 739-4200-00 | Brake Pedal Bracket Left-2500 |
| 16 | 3 | 632-5000-00 | 1/2 IDx 5/8 x 5/16 OIB Bushing |
| 17 | 1 | 613-2004-00 | 3/8"-16 Nyloc Jam Nut |
| 18 | 1 | 732-2003-00 | Bushing, Oil Impregnated |
| 19 | 1 | 618-6064-00 | 12"X1-3/4" Shoulder Bolt |
| 20 | 1 | 725-1009-00 | Pedal Spring Spacer LRG UTV 1-1/8 spacer |
| 21 | 1 | 734-2002-00 | Spring-Accelerator Pedal |
| 22 | 1 | 620-1000-00 | Clevis Pin, 1/4" x 3/4" |
| 23 | 1 | 620-1002-00 | Bow Tie Clip |
| 24 | 1 | 755-1004-00 | Accelerator Pedal Assy-LG UTV |
| 25 | 1 | 734-2000-00 | Spring-Park Brake |
| 26 | 1 | 739-4215-00 | Accel Pedal Lever |
| 27 | 1 | 739-4216-00 | Accel Pedal Spring Anchor |
| 28 | 1 | 725-1007-00 | Accel Pedal Spacer |
| 29 | 4 | 786-0016-00 | Headlight-High Beam-Large UTV |
| 30 | 1 | 739-4054-00 | Head Light Bracket-Right |
| 31 | 1 | 788-1012-00 | 4717 LED Headlight |
| 32 | 1 | 739-4058-00 | Head Light Bracket Brace-Right |
| 33 | 1 | 739-4056-00 | Head Light Bracket Brace-Left |
| 34 | 1 | 739-4052-00 | Head Light Bracket-Left |
| 35 | 4 | 618-2034-00 | 5/16" x 2-1/4" Hex Hd Cap Scr. |
| 36 | 1 | 785-1020-00 | Break Fluid DOT3 .3 quarts |
| 37 | 5 | 618-4007-00 | 1/4-20 x 1 Grade 5 Hex bolts Zinc |
| 38 | 5 | 613-9001-00 | 1/4-20 Hex Flange Nuts Zinc W/Serrations |
| 39 | 5 | 613-8073-00 | 1/4-20 Nylon Insert Locknut Zinc Orange Nylon |
| 40 | 1 | 618-6062-00 | 1/2" x 5/8" Soc. Shoulder Bolt |
| 41 | 1 | 613-2004-00 | 3/8"-16 Nyloc Jam Nut |
| 42 | 2 | 618-2029-00 | 5/16" x 1-1/4" Hex C/S Gr 5 |
| 43 | 1 | 618-2016-50 | 1/4-20 x 1-3/4" Hex Bolt |
| 44 | 1 | 618-2038-50 | 1/4-20 X1-1/2"  BH Socket Scr Blk |
| 45 | 2 | 613-8073-50 | 1/4-20 Nylon Insert Locknut BL |
| 46 | 2 | 619-4012-00 | .255 ID x .500 OD x .075 Thick TFE Washer |
| 47 | 1 | 734-2003-00 | Spring-Accelerator Pedal Assy |
| 48 | 2 | 618-8052-00 | 1/4-20 x 3/4 Grade 5 Hex bolts Zinc |

# Seat, Dash, and Grill Assemblies

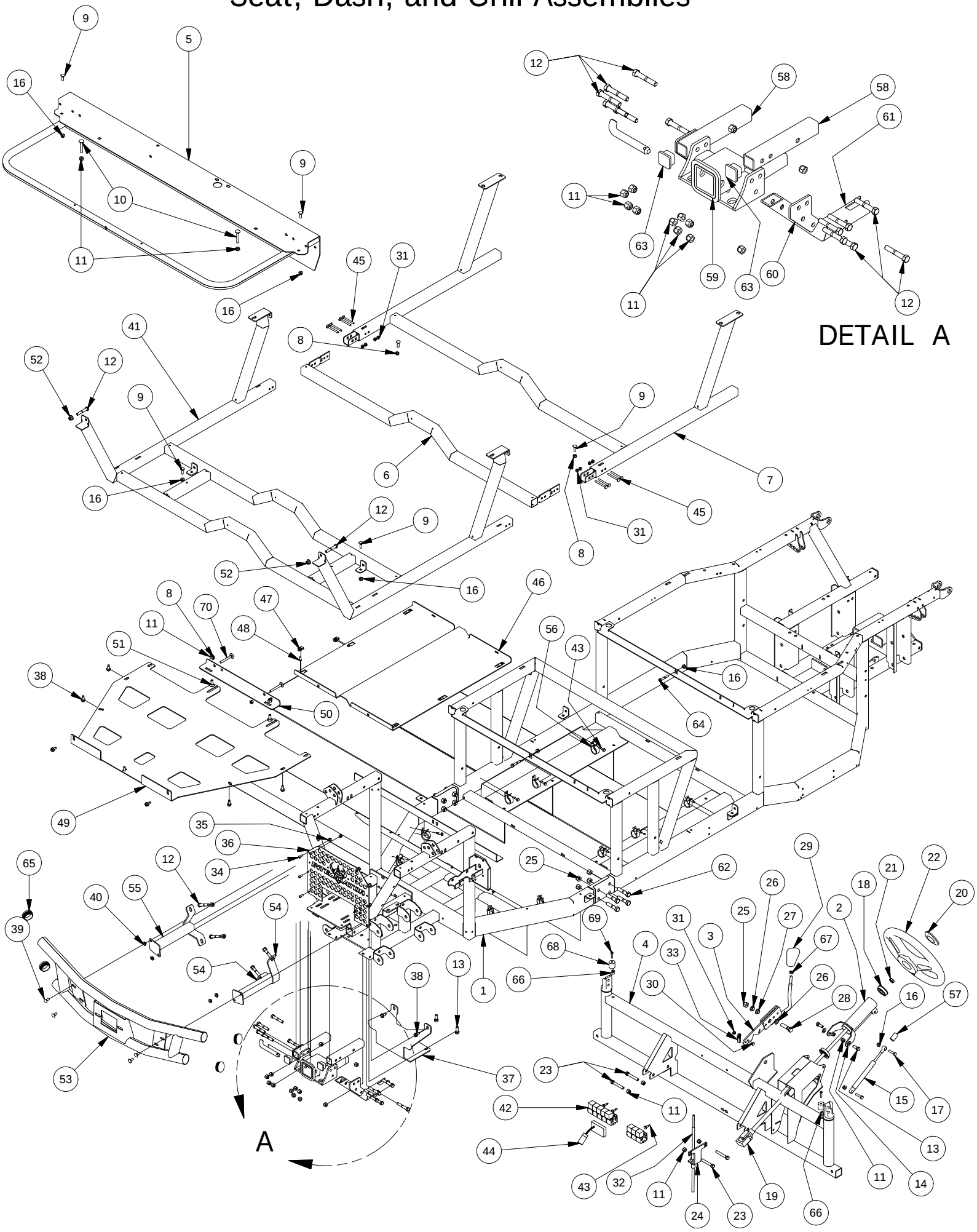

| Parts List | | | |
|---|---|---|---|
| ITEM | QTY | PART NUMBER | DESCRIPTION |
| 1 | 1 | 770-3011-00 | Front Frame-Truck/Crew Cab |
| 2 | 1 | 731-1200-00 | Steering Column Assy-Large UTV |
| 3 | 1 | 769-3000-00 | Shift Lever Assembly 2500 Series |
| 4 | 1 | 770-3002-00 | Dash Support Assy. |
| 5 | 1 | 770-3306-00 | Front Seat Frame Assembly Crew Cab |
| 6 | 1 | 770-3003-00 | Floor Board Support Rear Center Tube Assy |
| 7 | 1 | 770-3001-00 | Crew Cab Rear Floor Board Support Assy |
| 8 | 4 | 613-8047-00 | 5/16-18 Nylock HEX Nut |
| 9 | 10 | 618-8065-00 | 5/16-18 x 1 Carriage Bolt |
| 10 | 6 | 618-2023-00 | 3/8"-16 x 2-1/4" Carriage Bolt |
| 11 | 30 | 613-5041-00 | 3/8-16 Nylon Insert Locknut |
| 12 | 18 | 618-2022-00 | 3/8" - 16 X 2-1/4" Hex Bolt |
| 13 | 4 | 618-6049-00 | 3/8-16 X 1 GR 5 Hex Bolts Zinc |
| 14 | 2 | 619-0012-00 | 3/8 ID x 1/8 Plastic Washer |
| 15 | 1 | 735-2005-00 | Tilt Steering Gas Spring |
| 16 | 12 | 613-8049-00 | 5/16-18 Nylon Insert Flange Nut Zinc Orange Nylon |
| 17 | 2 | 618-1077-00 | 5/16 x 1-1/4 G8 Zn Hex Bolt |
| 18 | 2 | 720-4060-00 | Steering Column Bearing |
| 19 | 1 | 737-5002-00 | Steering Shaft Assembly-Large UTV |
| 20 | 1 | 722-2502-00 | Steering Wheel Cap-Hurricane |
| 21 | 1 | 737-5003-00 | Steering Shaft Wheel Nut |
| 22 | 1 | 722-2500-00 | Steering Wheel Large UTV |
| 23 | 4 | 618-2069-00 | 3/8" - 16 X 2-1/2" Hex Hd Cap Screw |
| 24 | 1 | 739-3364-60 | Upper Shift Cable Bracket |
| 25 | 9 | 613-6037-00 | 1/2-13 Nylon Insert Locknut |
| 26 | 2 | 732-2003-00 | Bushing, Oil Impregnated |
| 27 | 1 | 632-5000-00 | 1/2 IDx 5/8 x 5/16 OIB Bushing |
| 28 | 1 | 618-5049-00 | 1/2-13 x 2 GR5 Hex Bolt Zinc |
| 29 | 1 | 745-2000-00 | Shift Lever Knob-Large UTV |
| 30 | 1 | 618-4007-00 | 1/4-20 x 1 Grade 5 Hex bolts Zinc |
| 31 | 9 | 613-8073-00 | 1/4-20 Nylon Insert Locknut Zinc Orange Nylon |
| 32 | 1 | 764-2006-00 | Gear Shift Cable-2500 TRK SERIES & CREW CAB |
| 33 | 1 | 799-1002-00 | 1/4-28, Right Hand Thread Heim |
| 34 | 12 | 618-8064-50 | 1/4-20 x 5/8 Button Socket C/S |
| 35 | 12 | 613-8073-50 | 1/4-20 Nylon Insert Locknut BL |
| 36 | 1 | 726-4065-00 | Front Grill insert 2015 |
| 37 | 1 | 726-3210-00 | Brush Guard Skid Plate |
| 38 | 9 | 618-2021-00 | 5/16" - 18 3/4" Ind Hex Washr Hd - Type F |
| 39 | 8 | 618-8062-00 | 5/16-18x3/4 Carriage Bolts Zinc |
| 40 | 8 | 613-9002-00 | 5/16-18 Hex Flange Nuts Zinc w/Serations |
| 41 | 1 | 770-3005-00 | Floor Board Support Assembly Crew Cab Front |
| 42 | 8 | 786-0005-00 | 12 Volt Cube Relay |
| 43 | 15 | 630-7040-00 | 1/4 x 1 Hex Head Tek Screw |
| 44 | 1 | 786-2002-00 | PMW Controller, Team Rear Diff |
| 45 | 8 | 618-2045-00 | 1/4-20 x 2 1/2 Carriage Bolt |
| 46 | 1 | 726-4014-00 | Truck Series Skid Plate |
| 47 | 6 | 613-0054-00 | 1/4-20 Cage Nut |
| 48 | 6 | 618-8064-00 | 1/4-20 x 5/8 Buttonhead Socket C/S 18-8 SS |
| 49 | 1 | 726-4012-00 | Skid Plate - Kohler 750 EFI & DIESEL |
| 50 | 1 | 739-3902-00 | Truck Series Skid Plate Front Brkt |
| 51 | 2 | 618-2011-00 | 3/8 - 16 X 1" Carriage Bolt |
| 52 | 2 | 613-5202-00 | 3/8-16 Nylock Flange Nut |
| 53 | 1 | 770-3325-00 | Intimidator Bumper 2015 |
| 54 | 1 | 739-3221-00 | Brush Guard Mtg Brkt-Left |
| 55 | 1 | 739-3220-00 | Brush Guard Mtg Brkt-Right |
| 56 | 10 | 672-9000-00 | 1/2  EPDM Cushion Clamp |
| 57 | 1 | 725-2000-00 | 3/4" OD x 27/64" ID x 1" Long Nylon Spacer Blk |
| 58 | 2 | 703-4400-60 | Front Receiver Tube Mtg Tube |
| 59 | 1 | 793-3210-00 | Front ReceiverAssembly |
| 60 | 2 | 739-4401-60 | Front Receiver Gusset Intimidator |
| 61 | 2 | 703-4401-60 | Front Receiver Bottom Tube Intimidator |
| 62 | 8 | 618-6066-00 | 1/2"-13x2-1/4 Gr8 Hex Cap Scr |
| 63 | 2 | 714-1002-00 | 1-1/4"x1-1/4" Black Tube Plug |
| 64 | 2 | 618-8059-00 | 5/16-18 x 1-3/4 Grade 5 Hex Bolt |
| 65 | 4 | 614-3410-00 | 1-3/4" Round Tubing Plug |
| 66 | 2 | 619-0026-00 | Rivnut 1/4-20 Steel |
| 67 | 1 | 613-6051-00 | 3/8-24 Hex Nut Zinc |
| 68 | 2 | 729-1000-00 | Hood Rest Bumper-Lg UTV |
| 69 | 2 | 618-2037-50 | 1/4-20 X1 Button Socket C/S Black |
| 70 | 2 | 618-4709-00 | 5/16-18 x 2 3/4 Carriage Bolts |

# Plastics Assembly

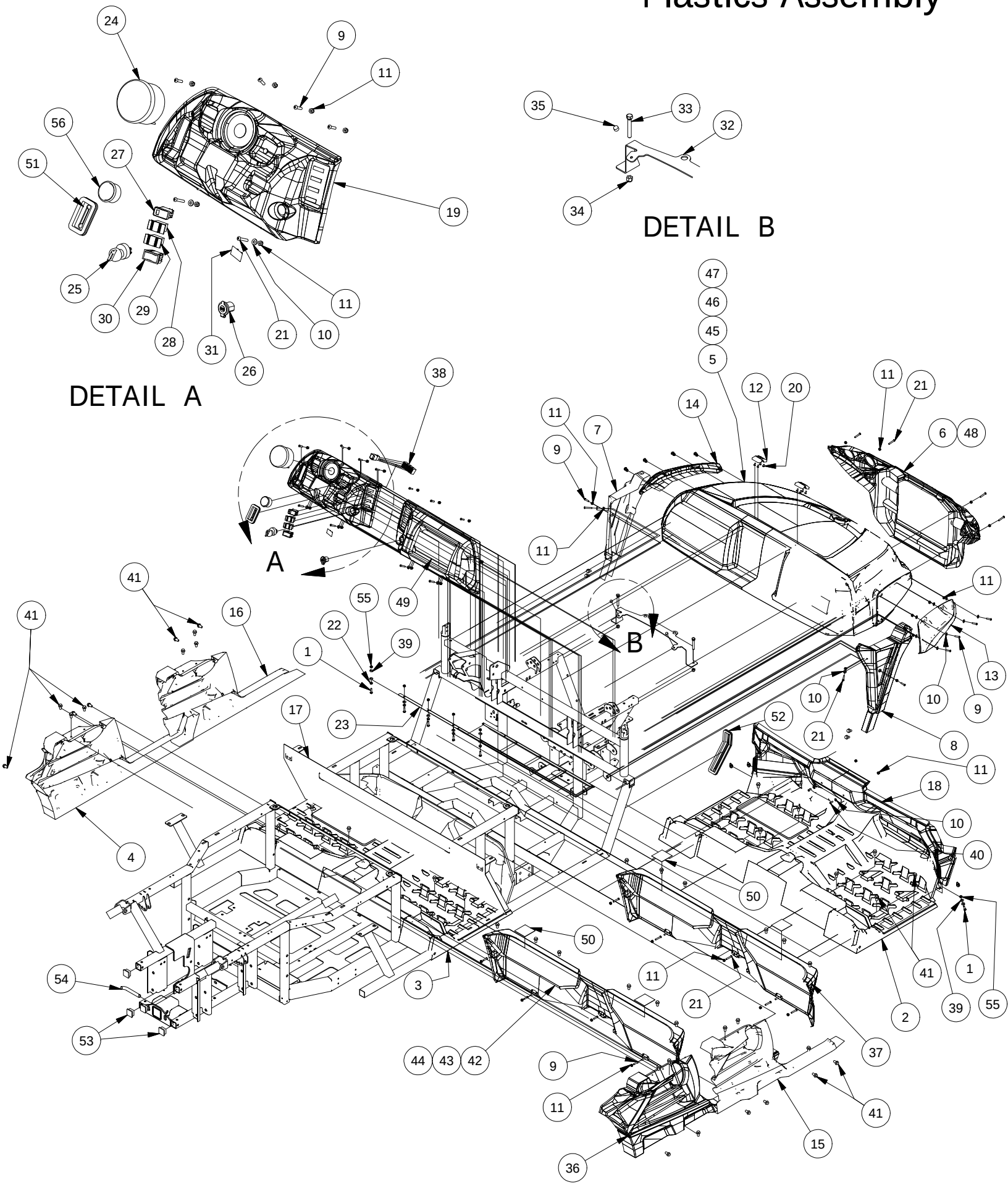

| Parts List | | | |
|---|---|---|---|
| ITEM | QTY | PART NUMBER | DESCRIPTION |
| 1 | 9 | 618-4007-00 | 1/4-20 x 1 Grade 5 Hex bolts Zinc |
| 2 | 1 | 780-2015-10 | Floor Board-Large UTV-Black |
| 3 | 1 | 780-2210-10 | Rear Floor Board Crew Cab |
| 4 | 1 | 780-2013-10 | Left Rear Lower Kick Panel, Crew Cab |
| 5 | 1 | 759-2000-00 | Hood Large UTV-Orange |
| 6 | 1 | 780-2060-10 | XD4 Front Grill |
| 7 | 1 | 780-2055-10 | Lower Front Fender Flare-Left |
| 8 | 1 | 780-2050-10 | Lower Front Fender Flare-Right |
| 9 | 23 | 618-2037-50 | 1/4-20 X1 Button Socket C/S Black |
| 10 | 24 | 619-0010-50 | 1/4 Flat Washer Black |
| 11 | 31 | 613-8073-50 | 1/4-20 Nylon Insert Locknut BL |
| 12 | 2 | 653-5010-00 | Hood Hinge |
| 13 | 1 | 780-2012-10 | Upper Front Fender Flare-Right |
| 14 | 1 | 780-2011-10 | Upper Front Fender Flare-Left |
| 15 | 1 | 780-2209-10 | Passenger Front Kick PNL. 4PSG |
| 16 | 1 | 780-2208-10 | Driver Front Kick PNL. 4PSG |
| 17 | 1 | 780-2211-10 | Front Seat Back Crew Cab |
| 18 | 1 | 780-2010-10 | Front Firewall-Large UTV-Black |
| 19 | 1 | 780-2039-00 | Dash-Large UTV |
| 20 | 8 | 630-2050-00 | M5-.8 x 10 Pan Phil M/S Zinc |
| 21 | 15 | 618-2038-50 | 1/4-20 X1-1/2"  BH Socket Scr Blk |
| 22 | 5 | 613-9001-00 | 1/4-20 Hex Flange Nuts Zinc W/Serrations |
| 23 | 1 | 726-3242-60 | Firewall Mount Brkt |
| 24 | 1 | 786-2020-00 | Speedometer/Display Gauge |
| 25 | 1 | 777-1000-00 | Ignition Switch |
| 26 | 1 | 677-2075-00 | 12 Volt Auxilliary Plug |
| 27 | 1 | 786-2038-00 | 4WD Switch |
| 28 | 1 | 786-2034-00 | Head Light Hi/off/Low Beam Sw. |
| 29 | 1 | 786-2030-00 | Differential Lock Switch |
| 30 | 1 | 786-2036-00 | Dump Bed Up/Down Switch |
| 31 | 1 | 786-2040-00 | Panel Plug-Eaton Blank Switch |
| 32 | 1 | 739-3374-00 | Upper Radiator Mounting Brkt |
| 33 | 2 | 618-2069-00 | 3/8" - 16 X 2-1/2" Hex Hd Cap Screw |
| 34 | 2 | 613-5041-00 | 3/8-16 Nylon Insert Locknut |
| 35 | 2 | 729-1002-00 | Buttom Bumper-Tailgate-2500 |
| 36 | 1 | 780-2014-10 | Right Rear Lower Kick Panel, Crew Cab |
| 37 | 1 | 780-2212-00 | Front Seat Box 4 Seater |
| 38 | 1 | 786-2013-00 | Wiring Harness-Diesel Truck & Crew |
| 39 | 15 | 619-0023-00 | 5/16 flat Washer 18-8 SS |
| 40 | 5 | 618-8064-50 | 1/4-20 x 5/8 Button Socket C/S |
| 41 | 54 | 618-6065-00 | AUEVCO P/N 17216 HOLE PLUG BLACK |
| 42 | 1 | 780-2020-20 | Center Seat Panel-Large UTV-Gr |
| 43 | 1 | 780-2021-80 | Center Seat Panel-2500-Camo |
| 44 | 1 | 780-2020-40 | Center Seat Panel-2500-Charco |
| 45 | 1 | 780-2000-20 | Hood-OD Green |
| 46 | 1 | 780-2000-80 | Hood-Camo |
| 47 | 1 | 780-2000-40 | Hood-Matallic Black |
| 48 | 1 | 780-2061-10 | Base Front Grill |
| 49 | 1 | 780-2040-00 | Glovebox |
| 50 | 4 | 729-1006-00 | Seat Pin Frame Guard-3x3.125" |
| 51 | 1 | 736-2000-00 | Shift Lever Boot-Large UTV |
| 52 | 1 | 736-2002-00 | Break Pedal Boot-Lg UTV |
| 53 | 4 | 714-1004-00 | 1-1/4"x1-1/4" Black Tube Plug |
| 54 | 1 | 793-3212-00 | Hitch Pin |
| 55 | 9 | 613-8073-00 | 1/4-20 Nylon Insert Locknut Zinc Orange Nylon |
| 56 | 1 | 786-2024-00 | Indicator Light |

# Crew Cab Diesel
# CVT Assembly

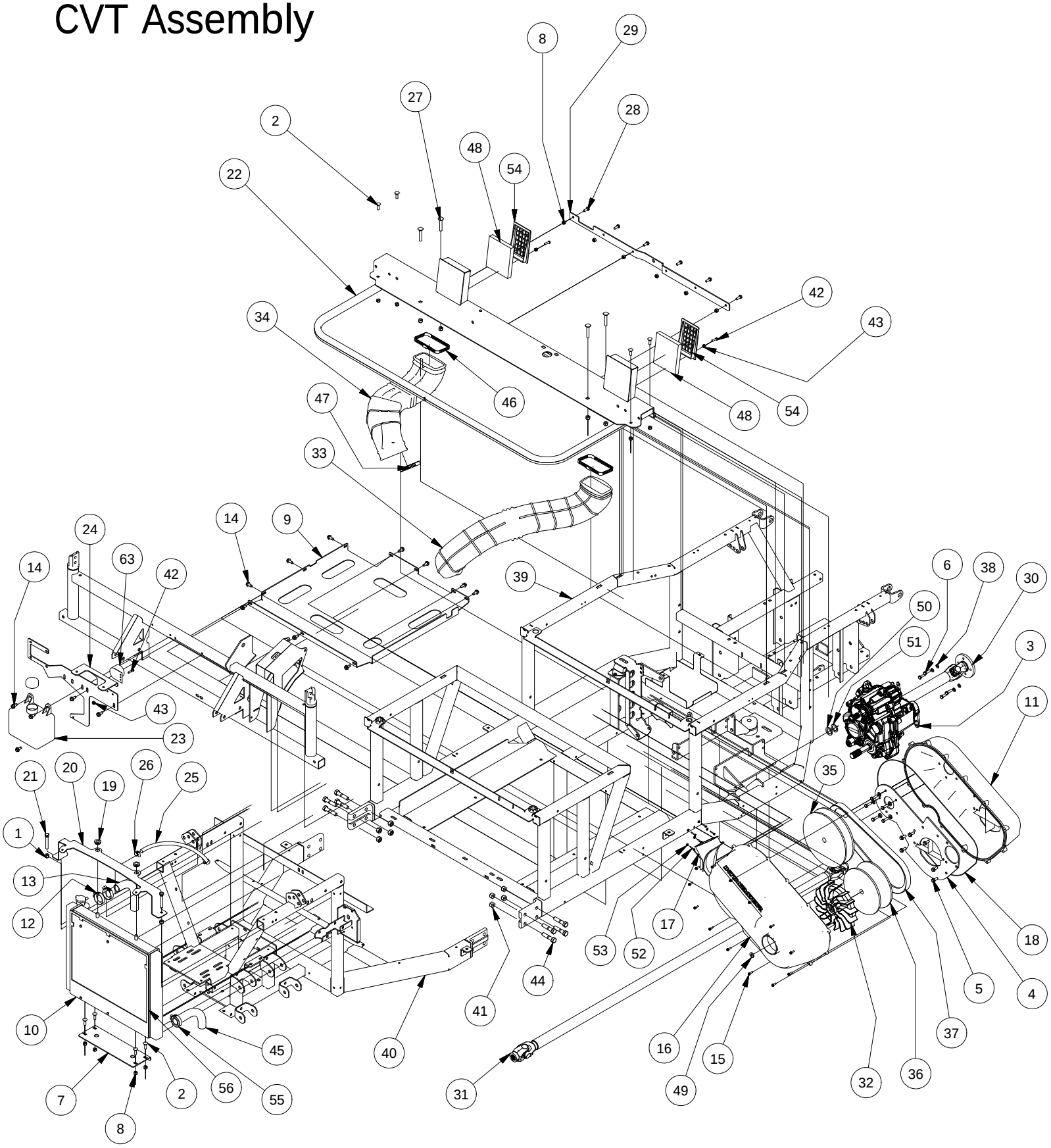

| Parts List | | | |
|---|---|---|---|
| ITEM | QTY | PART NUMBER | DESCRIPTION |
| 1 | 6 | 613-5041-00 | 3/8-16 Nylon Insert Locknut |
| 2 | 8 | 618-8065-00 | 5/16-18 x 1 Carriage Bolt |
| 3 | 1 | 737-3000-00 | Transmission |
| 4 | 1 | 726-3240-00 | Diesel/CVT Plate |
| 5 | 6 | 618-6073-00 | M8x1.25x20mm Hex Washer Hd MS |
| 6 | 9 | 618-1080-00 | 5/16-18 x 1" GR 8 Hex bolt |
| 7 | 1 | 739-3337-00 | Lower Radiator Mounting Brkt |
| 8 | 14 | 613-8047-00 | 5/16-18 Nylock HEX Nut |
| 9 | 1 | 793-1002-00 | Intimidator Diesel Skid Plate |
| 10 | 1 | 761-2000-00 | RadiatorAssy-Large MTV |
| 11 | 1 | 714-3002-00 | CVT Enclosure Rear-Diesel |
| 12 | 2 | 772-2017-00 | ABA 22-32mm x 12mm Wide Hose Clamp |
| 13 | 1 | 751-3006-00 | Coolant Hose Passenger Side, Crew/Truck Series |
| 14 | 15 | 618-2021-00 | 5/16" - 18 3/4" Ind Hex Washr Hd - Type F |
| 15 | 13 | 718-3000-00 | CVT Enclosure Bolt |
| 16 | 1 | 714-3000-00 | CVT Enclosure Front Cover |
| 17 | 1 | 714-3004-00 | CVT Enclosure Outlet Nozzle |
| 18 | 1 | 712-3012-00 | CVT Gasket |
| 19 | 4 | 719-5000-00 | Radiator Grommets |
| 20 | 1 | 739-3374-00 | Upper Radiator Mounting Brkt |
| 21 | 2 | 618-2069-00 | 3/8" - 16 X 2-1/2" Hex Hd Cap Screw |
| 22 | 1 | 770-3006-00 | Diesel Seat Frame |
| 23 | 1 | 767-2006-00 | Radiator Overflow Bottle-2500 |
| 24 | 1 | 739-2057-00 | Upper Hood Support Brkt-Diesel-Weber |
| 25 | 1 | 751-1013-00 | 1.5 ft. 5/16" Hose - High Temp |
| 26 | 2 | 672-8067-00 | Hose Clamp No. 4 - 7/32 - 5/8 |
| 27 | 4 | 618-2023-00 | 3/8"-16 x 2-1/4" Carriage Bolt |
| 28 | 6 | 618-8063-00 | 5/16-18 x 3/4 GR 5 Hex bolt Zinc |
| 29 | 1 | 739-3408-00 | Rotary Latch Bracket-Frame (Base Model Only) |
| 30 | 1 | 737-2026-00 | Rear Drive Shaft Lg UTV-Diesel |
| 31 | 1 | 737-2031-00 | 750 EFI/ Diesel Ext Bed TRK Series |
| 32 | 1 | 770-1020-00 | CVT Clutch Fan |
| 33 | 1 | 751-1022-00 | CVT Inlet Hose-Diesel |
| 34 | 1 | 751-1024-00 | CVT Outlet Hose-Diesel |
| 35 | 1 | 770-1004-00 | CVT Driven Pulley-Diesel |
| 36 | 1 | 770-1002-00 | CVT Driver Pulley-Diesel |
| 37 | 1 | 741-1002-00 | CVT Belt-Diesel |
| 38 | 4 | 619-8051-00 | 5/16 Lockwasher Zinc |
| 39 | 1 | 770-3012-00 | Crew Cab Rear Frame Assy-Diesel |
| 40 | 1 | 770-3011-00 | Front Frame-Truck/Crew Cab |
| 41 | 8 | 613-6037-00 | 1/2-13 Nylon Insert Locknut |
| 42 | 3 | 618-2037-50 | 1/4-20 X1 Button Socket C/S Black |
| 43 | 3 | 613-8073-50 | 1/4-20 Nylon Insert Locknut BL |
| 44 | 8 | 618-6066-00 | 1/2"-13x2-1/4 Gr8 Hex Cap Scr |
| 45 | 1 | 751-3007-00 | Coolant Hose Drivers Side, Crew/Truck Series |
| 46 | 2 | 772-2014-00 | CVT Plenum Hose Clamp |
| 47 | 1 | 772-2016-00 | CVT Enclousre Hose Clamp |
| 63 | 1 | 786-2060-00 | Piezeoelectric Buzzer |
| 48 | 2 | 763-2100-00 | CVT Plenum Filter Media |
| 49 | 1 | 619-0061-00 | .406" ID x .834" Nord-Loack Washer, CVT Clutch |
| 50 | 1 | 725-1001-00 | .12 CVT Shim |
| 51 | 1 | 725-1002-00 | .080 CVT Shim |
| 52 | 5 | 618-2114-00 | 6/32 x 3/4 Pan Head Hex Head Machine Screw |
| 53 | 5 | 613-0006-00 | 6-32 Hex Nut |
| 54 | 2 | 780-2100-00 | CVT Plenum Bezel |
| 55 | 1 | 772-2018-00 | ABA 32-44mm x 12mm Wide Hose Clamp |
| 56 | 1 | 785-1000-00 | Anitfreeze-Premix 1.5 gallons |

# Kohler Diesel Engine

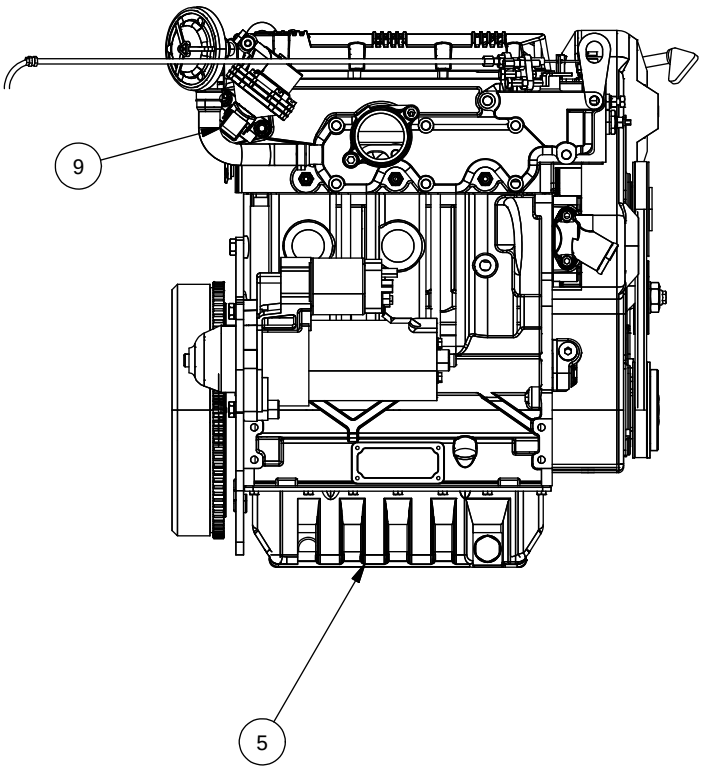


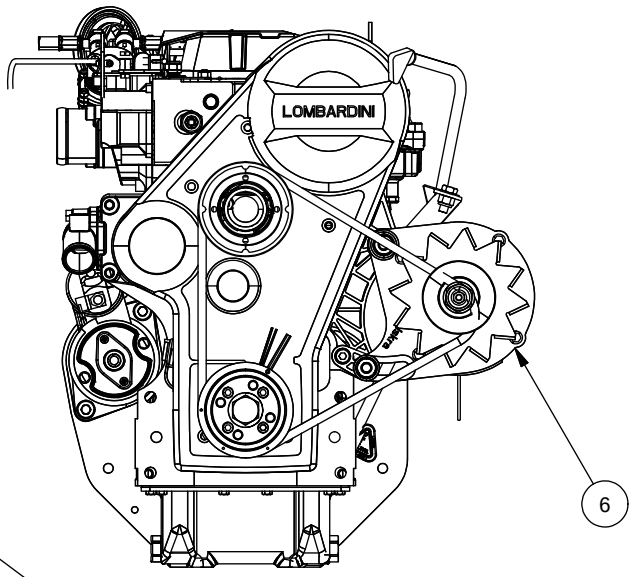


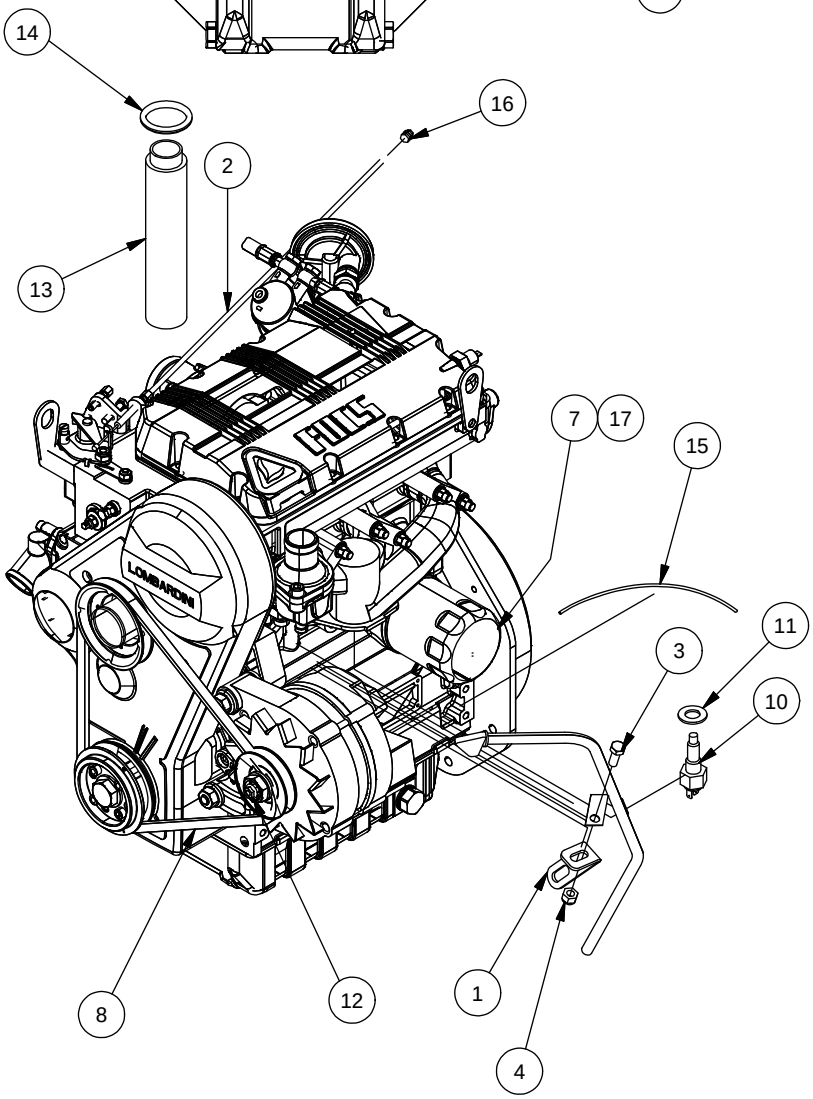


| Parts List | | | |
|---|---|---|---|
| ITEM | QTY | PART NUMBER | DESCRIPTION |
| 1 | 1 | 739-3410-00 | Diesel Engine Dipstick Brkt |
| 2 | 1 | 764-2002-00 | Throttle Cable-Kohler Diesel |
| 3 | 1 | 618-8063-00 | 5/16-18 x 3/4 GR 5 Hex bolt Zinc |
| 4 | 1 | 613-8047-00 | 5/16-18 Nylock HEX Nut |
| 5 | 1 | 715-3000-00 | Diesel Engine Package |
| 6 | 1 | 715-3131-00 | Alternator |
| 7 | 1 | 715-3102-00 | Oil Filter |
| 8 | 1 | 715-3133-00 | Belt |
| 9 | 1 | 715-3114-00 | Fuel Lift Pump |
| 10 | 1 | 786-2006-00 | Temperature Water Sender-Lg UTV |
| 11 | 1 | 712-3004-00 | Diesel Temp Sd/Sw Crush Washer |
| 12 | 1 | 613-0062-00 | M6-1.0 Hex Flange Nut w/ Serrations |
| 13 | 1 | 724-2002-00 | Diesel Oil Fill Adapter |
| 14 | 1 | 719-5002-00 | Diesel Oil Fill Grommet |
| 15 | 1 | 786-1015-00 | 16 AWG Insulated Standard Copper Wire |
| 16 | 1 | 764-2005-00 | Cable Stop Assembly |
| 17 | 1 | 785-1030-00 | 10W 30 Motor Oil 1.5 quarts |

# Diesel Engine Assembly-1

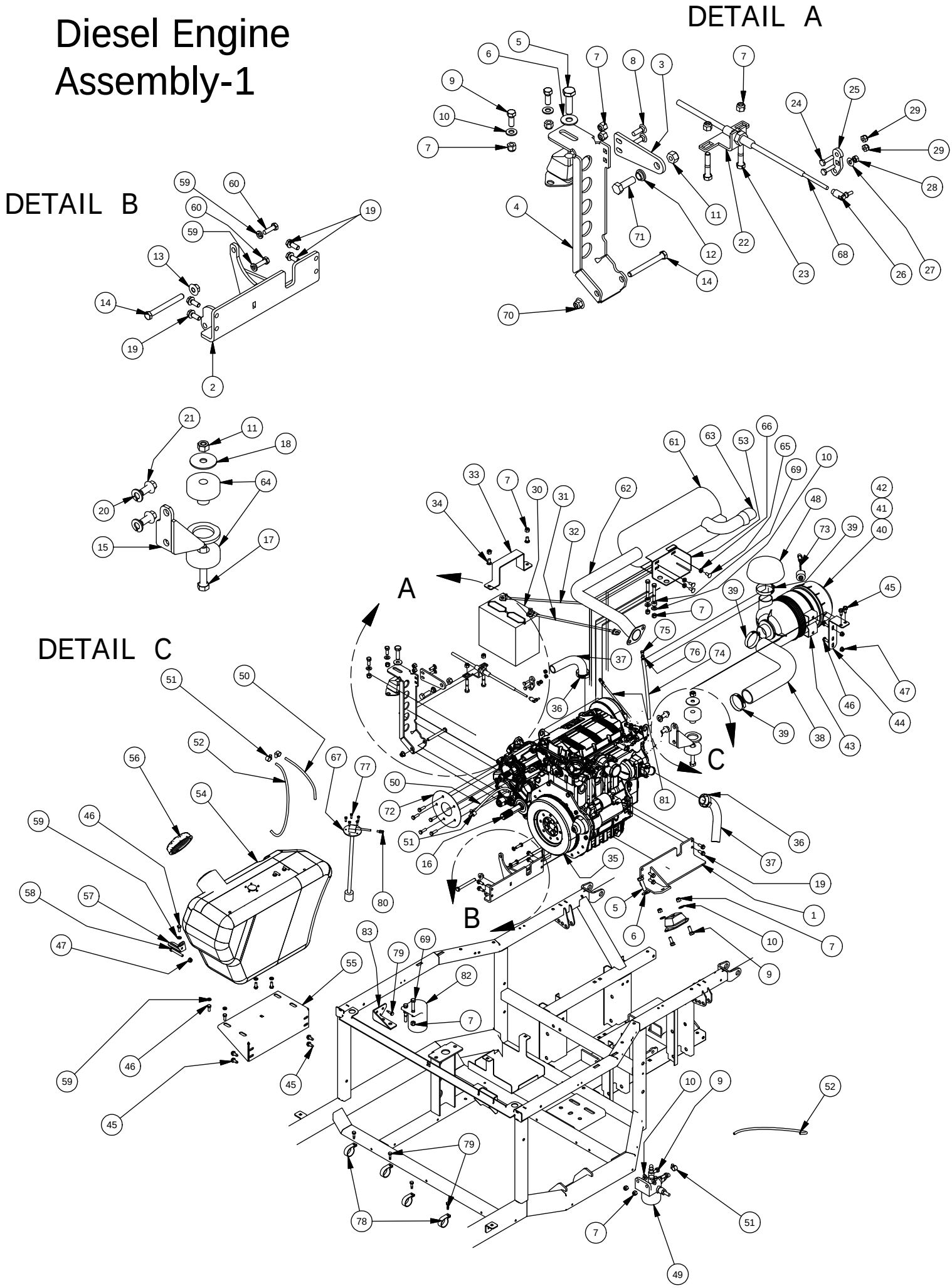

| Diesel Engine Assembly-1 | | | |
|---|---|---|---|
| ITEM | QTY | PART NUMBER | DESCRIPTION |
| 1 | 1 | 739-2074-00 | Left Diesel Engine Arm Assy |
| 2 | 1 | 739-2076-00 | Diesel/Transmission Bracket/Assy |
| 3 | 1 | 739-3390-60 | Upper Transmission Mount Tab |
| 4 | 1 | 739-3378-00 | Team Trans Right Mounting |
| 5 | 2 | 618-2084-00 | M12 X 1.75 X 45MM Hex Tap Bolt |
| 6 | 2 | 619-5010-00 | .565 IDx 1.25 ODx 0.95 Washer |
| 7 | 16 | 613-5041-00 | 3/8-16 Nylon Insert Locknut |
| 8 | 2 | 618-8065-00 | 5/16-18 x 1 Carriage Bolt |
| 9 | 6 | 618-6049-00 | 3/8-16 X 1 GR 5 Hex Bolts Zinc |
| 10 | 8 | 619-0057-50 | 3/8 Flat Washer Black Zinc |
| 11 | 2 | 613-6037-00 | 1/2-13 Nylon Insert Locknut |
| 12 | 1 | 732-2004-00 | Bushing, Oil Impregnated 1/2" ID |
| 13 | 1 | 613-5201-00 | 3/8-16 Serrated Flange Nut |
| 14 | 2 | 618-2025-00 | 3/8" -16 X 3-1/2" hex C/S-Gr5 |
| 15 | 1 | 739-4006-00 | Diesel Rear Motor Arm Assembly |
| 16 | 1 | 737-3000-00 | Transmission |
| 17 | 1 | 618-2006-00 | 1/2" - 13X3-1/2" Hex Bolt Gr 5 |
| 18 | 1 | 619-0060-00 | 1/2 Lock Washer Zinc |
| 19 | 8 | 618-6073-00 | M8x1.25x20mm Hex Washer Hd MS |
| 20 | 2 | 619-5007-00 | 1/2 Lock Washer Zinc |
| 21 | 2 | 618-2086-00 | M12x1.75x25mm Hex Tap Bolt |
| 22 | 1 | 739-3366-60 | Lower Shift Cable Bracket |
| 23 | 2 | 618-2024-00 | 3/8 -16 X 2" Hex Bolt |
| 24 | 2 | 618-4007-00 | 1/4-20 x 1 Grade 5 Hex bolts Zinc |
| 25 | 1 | 739-3376-60 | Team Trans Shift Lever Ext |
| 26 | 1 | 710-1038-00 | 1/4" X 28 Quick Disc. Rod End |
| 27 | 1 | 619-4008-00 | 1/4 Lock Washer Zinc |
| 28 | 1 | 613-0028-00 | 1/4-28 Hex Nut |
| 29 | 2 | 613-8073-00 | 1/4-20 Nylon Insert Locknut Zinc Orange Nylon |
| 30 | 1 | 768-1002-00 | 12 Volt Battery-Diesel |
| 31 | 1 | 764-2500-00 | Positive Battery Cable 4Ga. |
| 32 | 1 | 764-2502-00 | Negative Battery Cable, 4Ga. |
| 33 | 1 | 757-3002-00 | Diesel Batt Strap |
| 34 | 2 | 618-2068-00 | 3/8 x 3/4" GR 8 Carr Bolts Zinc |
| 35 | 1 | 715-3000-00 | Diesel Engine Package |
| 36 | 2 | 772-2018-00 | ABA 32-44mm x 12mm Wide Hose Clamp |
| 37 | 2 | 751-3000-00 | Coolant Hose 1" ID X 1.25 OD |
| 38 | 1 | 736-2005-00 | Intake Adapter Hose-Diesel |
| 39 | 3 | 672-9052-00 | 1-9/16 to 2-1/2 Hose Clamp |
| 40 | 1 | 763-1001-00 | Air Filter |
| 41 | 1 | 763-1002-00 | Air Box Cap |
| 42 | 1 | 763-3000-00 | Air Box Assembly |
| 43 | 1 | 772-1100-00 | Air Canister Clamp |
| 44 | 1 | 739-3370-00 | Air Filter Bracket |
| 45 | 6 | 618-2021-00 | 5/16" - 18 3/4" Ind Hex Washr Hd - Type F |
| 46 | 7 | 618-8063-00 | 5/16-18 x 3/4 GR 5 Hex bolt Zinc |
| 47 | 3 | 613-8049-00 | 5/16-18 Nylon Insert Flange Nut Zinc Orange Nylon |
| 48 | 1 | 763-2012-00 | Rain Cap- Air Filter |
| 49 | 1 | ED0021752880-S | Diesel Engine Fuel Filter |
| 50 | 1 | 751-1014-00 | 8 ft.-1/4 Fuel Line - Low Perm |
| 51 | 5 | 672-8067-00 | Hose Clamp No. 4 - 7/32 - 5/8 |
| 52 | 1 | 751-1016-00 | 8 ft.-3/16" Hose |
| 53 | 1 | 739-2064-00 | Muffler Mount Bracket |
| 54 | 1 | 767-2001-00 | Fuel Tank-Diesel Engine |
| 55 | 1 | 739-2058-00 | Lower Fuel Tank Support Brkt |
| 56 | 1 | 767-2004-00 | Fuel Tank Cap-Lg UTV-Diesel |
| 57 | 1 | 739-2059-60 | Upper Fuel Tank Support Brkt |
| 58 | 1 | 618-2034-00 | 5/16" x 2-1/4" Hex Hd Cap Scr. |
| 59 | 7 | 619-8051-00 | 5/16 Lockwasher Zinc |
| 60 | 7 | 618-1080-00 | 5/16-18 x 1" GR 8 Hex bolt |
| 61 | 1 | 715-3012-00 | Muffler-Kohler 25 EFI & Diesel |
| 62 | 1 | 715-3014-00 | Exhaust Mainfold-Diesel-Black |
| 63 | 1 | 715-3016-00 | Spark Arrestor Kit For Muffler |
| 64 | 1 | 732-1014-00 | Engine Vibration Mount |
| 65 | 3 | 618-8062-50 | 5/16-18x3/4 Carriage Bolts Black Zinc |
| 66 | 3 | 613-9002-00 | 5/16-18 Hex Flange Nuts Zinc w/Serations |
| 67 | 1 | 786-2004-00 | Fuel Sender |
| 68 | 1 | 764-2004-00 | Gear shift Cable-Large UTV |
| 69 | 4 | 618-2078-00 | 3/8-16 X 2-3/4 Hex C/S GR 2 zinc |
| 70 | 1 | 613-5202-00 | 3/8-16 Nylock Flange Nut |
| 71 | 1 | 630-7044-00 | 1/2-13x 1.2" Hex Tap Bolt |
| 72 | 1 | 726-3254-00 | Diesel Transmission Washer |
| 73 | 1 | 763-3006-00 | Filter Restriction Switch |
| 74 | 1 | 751-1018-00 | 5/16 ID 7/16 OD Hose |
| 75 | 1 | 724-1045-00 | Breather Plug Threaded |
| 76 | 1 | 772-1001-00 | 5/16 Spring Hose Clamp |
| 77 | 5 | 618-2105-00 | 10-32 x 5/8" Indented hex Head machine Screw |
| 78 | 4 | 672-9050-00 | 3/4 EPDM Cushion Clamp |
| 79 | 5 | 630-7040-00 | 1/4 x 1 Hex Head Tek Screw |
| 80 | 1 | 613-0008-00 | Male Push on Terminal |
| 81 | 1 | 664-0040-00 | 14" Battery Cable 2 Gauge |
| 82 | 1 | ED161434-s | Remote Oil Filter Kit |
| 83 | 1 | 739-2303-00 | Diesel Remote Oil Filter Bracket |

# Rear Suspension Assembly

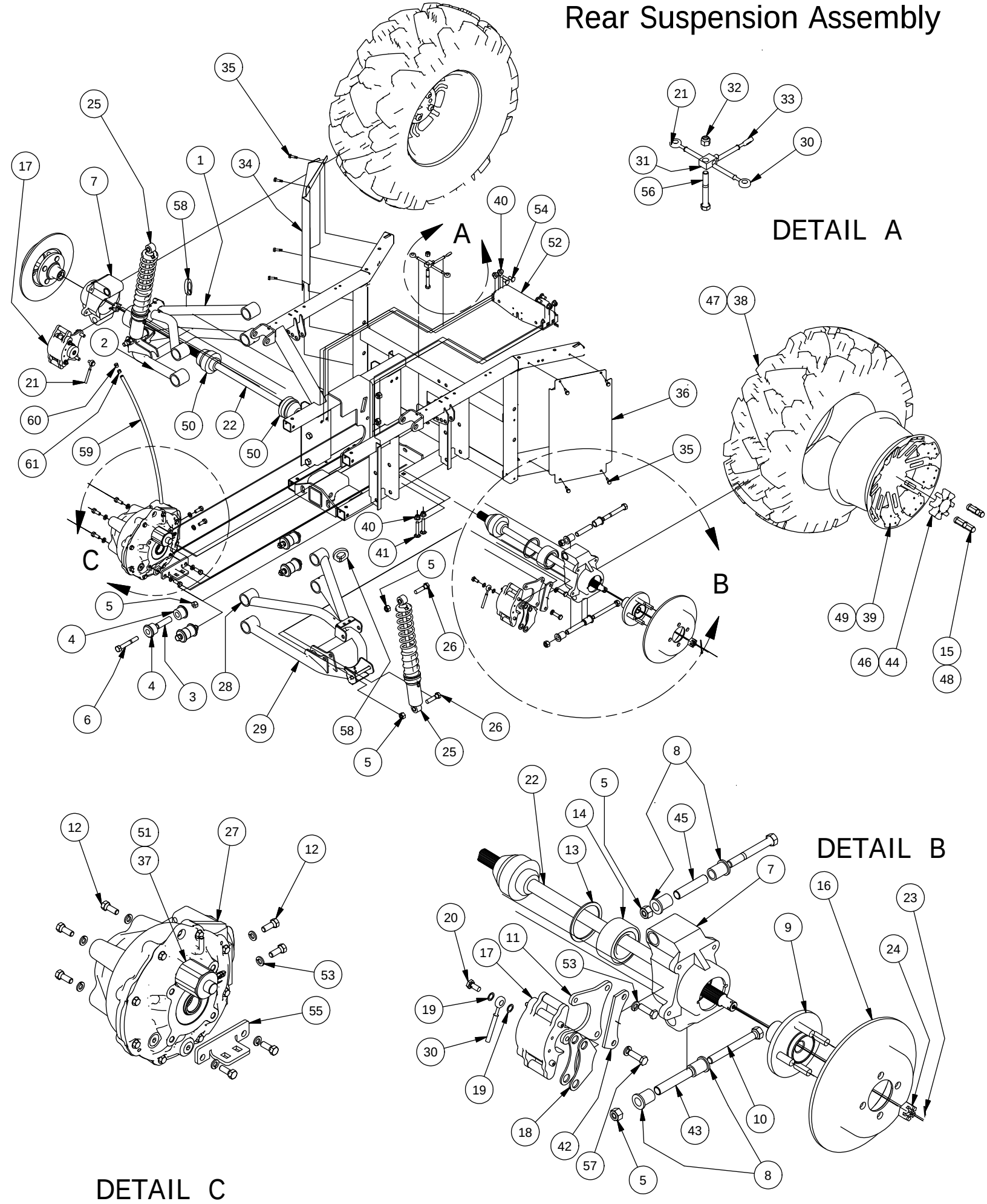

| Rear Suspesion Assembly | | | |
|---|---|---|---|
| ITEM | QTY | PART NUMBER | DESCRIPTION |
| 1 | 1 | 787-3210-00 | Left Rear Upper A-arm Assy |
| 2 | 1 | 787-3212-00 | Left Rear Lower A-arm Assy |
| 3 | 8 | 732-2001-00 | Large MTV A-Arm Bushing Sleeve |
| 4 | 16 | 732-2000-00 | Large MTV A-Arm Bushing |
| 5 | 16 | 613-6037-00 | 1/2-13 Nylon Insert Locknut |
| 6 | 8 | 618-2006-00 | 1/2" - 13X3-1/2" Hex Bolt Gr 5 |
| 7 | 2 | 770-1040-00 | Independent Rear Suspension |
| 8 | 8 | 710-2000-00 | Flange BUSHING-Large UTV |
| 9 | 2 | 786-2000-00 | Hub-Large UTV |
| 10 | 2 | 618-2030-00 | 1/2" -13 x 4.5" Hex Cap Screw |
| 11 | 2 | 639-0054-60 | Brake Caliper Brkt-Ausco-Elect |
| 12 | 7 | 618-6049-00 | 3/8-16 X 1 GR 5 Hex Bolts Zinc |
| 13 | 2 | 710-2003-00 | Retaining Ring-Spindle Bearing |
| 14 | 2 | 710-2002-00 | Spindle Bearing LRG UTV |
| 15 | 8 | 613-0001-00 | XD4 Lug Nut |
| 16 | 2 | 716-2000-00 | Rotor - Large UTV |
| 17 | 2 | 616-1051-00 | Hydraulic Caliper |
| 18 | 2 | 616-1056-00 | Brake Pad Kit (2 Pads per Kit) |
| 19 | 4 | 616-1025-00 | 10 mm copper crush washer |
| 20 | 2 | 616-1015-00 | Banjo Bolt M 10mm x 1.0 |
| 21 | 1 | 716-3008-00 | Brake Line Left Rear-Lg UTV |
| 22 | 2 | 737-2034-00 | Half-Shaft - Rear Large UTV |
| 23 | 2 | 765-1016-00 | Rear Hub Castle Nut Cotter Pin |
| 24 | 2 | 765-1012-00 | Rear Hub Castle Nut |
| 25 | 2 | 787-2010-00 | Rear Shock-Lg. UTV-Gas & Diesel |
| 26 | 4 | 618-5049-00 | 1/2-13 x 2 GR5 Hex Bolt Zinc |
| 27 | 1 | 737-3005-00 | Rear Differential, Large MTV |
| 28 | 1 | 787-3211-00 | Right Rear Upper A-arm assy |
| 29 | 1 | 787-3213-00 | Right Rear Lower A-Arm Assy |
| 30 | 1 | 716-3006-00 | Brake Line Right Rear-Lg UTV |
| 31 | 1 | 716-3010-00 | Brake Line Tee-Rear-Lg UTV |
| 32 | 1 | 613-5041-00 | 3/8-16 Nylon Insert Locknut |
| 33 | 1 | 716-3004-00 | Brake Line-MC to Rear T-Lg UTV |
| 34 | 1 | 726-3226-00 | Left Rear Fender Well |
| 35 | 8 | 630-7040-00 | 1/4 x 1 Hex Head Tek Screw |
| 36 | 1 | 726-3228-00 | Right Rear Fender Well |
| 37 | 1 | 737-3006-00 | Rear Diff Lock Solenoid |
| 38 | 2 | 722-4100-00 | XD4 Rear Tire |
| 39 | 2 | 722-4002-00 | XD4 Rear Wheel |
| 40 | 6 | 613-5202-00 | 3/8-16 Nylock Flange Nut |
| 41 | 2 | 618-2023-00 | 3/8"-16 x 2-1/4" Carriage Bolt |
| 42 | 2 | 725-3210-60 | Caliper Brake Mount Spacer |
| 43 | 2 | 725-3026-00 | IRS Lower Spacer |
| 44 | 2 | 722-4004-00 | XD4 Wheel Center Cap |
| 45 | 2 | 725-3025-00 | IRS Upper Spacer |
| 46 | 2 | 722-4110-00 | Base Wheel Center Cap |
| 47 | 2 | 722-4113-00 | Base Rear Tire |
| 48 | 8 | 713-1012-50 | Open End Lug Nut-Black (Base Model Only) |
| 49 | 2 | 722-4007-00 | Base Rear Wheel |
| 50 | 4 | 712-3222-00 | Half Shaft CV Boot Kit |
| 51 | 1 | 737-3007-00 | Rear Diff Lock Solenoid Spring |
| 52 | 1 | 739-3380-00 | Rear Diff Cage Top Brace |
| 53 | 11 | 619-5037-00 | 3/8 Lockwasher Zinc |
| 54 | 4 | 618-2068-00 | 3/8 x 3/4" GR 8 Carr Bolts Zinc |
| 55 | 1 | 739-3328-60 | Right Rear Differential Mount |
| 56 | 1 | 618-2078-00 | 3/8-16 X 2-3/4 Hex C/S GR 2 Zinc |
| 57 | 4 | 618-5040-00 | 3/8-16 x 1-1/4 Hex Bolt GR5 |
| 58 | 2 | 772-2050-00 | Break Line Anchor-1-1/4" |
| 59 | 1 | 751-1018-00 | 5/16 ID 7/16 OD Hose |
| 60 | 1 | 724-1045-00 | Breather Plug Threaded |
| 61 | 1 | 772-1001-00 | 5/16 Spring Hose Clamp |

# Crew Cab Roll Cage Assembly

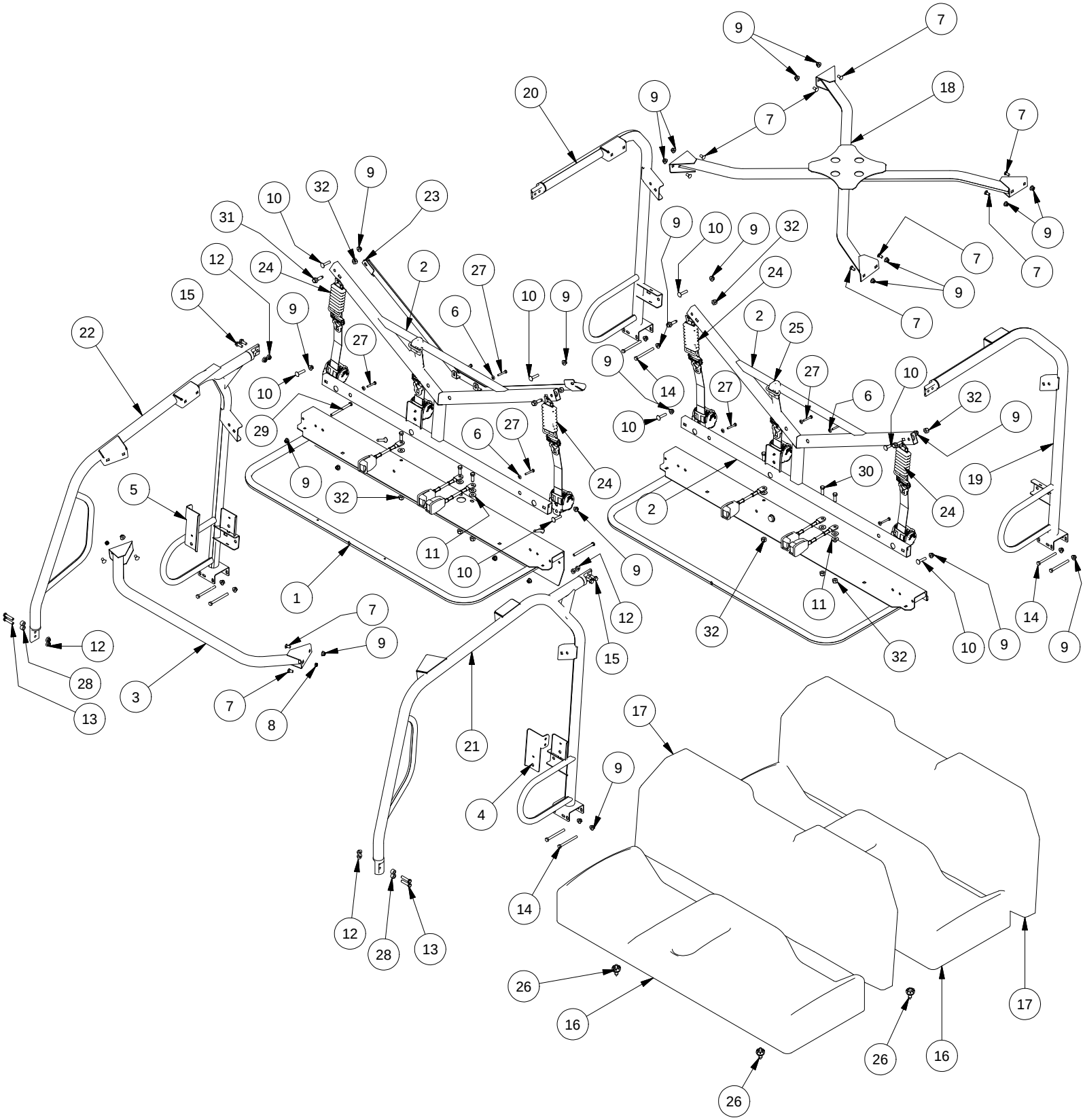

| Parts List | | | |
|---|---|---|---|
| ITEM | QTY | PART NUMBER | DESCRIPTION |
| 1 | 1 | 770-3306-00 | Front Seat Frame Assembly Crew Cab |
| 2 | 2 | 780-3002-00 | ROPS K Brace Assy For Seat Back w/ Integral Headrest |
| 3 | 1 | 703-3318-00 | ROPS Front Cross Brace |
| 4 | 1 | 739-4498-00 | Crew Cab Rear Side Net Latch Bracket left |
| 5 | 1 | 739-4499-00 | Crew Cab Rear Side Net Latch Bracket Right |
| 6 | 8 | 619-4008-00 | 1/4 Lock Washer Zinc |
| 7 | 12 | 618-2068-00 | 3/8 x 3/4" GR 8 Carr Bolts Zinc |
| 8 | 2 | 613-2004-00 | 3/8"-16 Nyloc Jam Nut |
| 9 | 30 | 613-5202-00 | 3/8-16 Nylock Flange Nut |
| 10 | 10 | 618-2048-00 | 3/8-16 x 1-3/4 Carriage Bolt |
| 11 | 8 | 619-8052-00 | 7/16 USS Flat Washer Zinc |
| 12 | 8 | 613-5201-00 | 3/8-16 Serrated Flange Nut |
| 13 | 4 | 618-2008-00 | 3/8"-16X1-3/4" Gr 8 C/S |
| 14 | 8 | 618-1081-00 | 3/8" -16 x4 Gr.8 Hex bolt Cs |
| 15 | 4 | 618-6055-50 | 3/8 - 16 X 1 Flange Bolt BLK Gr.8 |
| 16 | 2 | 771-2002-00 | Seat Bottom-Large UTV |
| 17 | 2 | 771-2001-00 | Seat Back-Large UTV |
| 18 | 1 | 780-3022-00 | ROPS X-Brace Assembly Crew Cab |
| 19 | 1 | 780-3014-00 | ROPS Left Rear Hoop Assy Crew Cab |
| 20 | 1 | 780-3016-00 | ROPS Right Rear Hoop Assy Crew Cab |
| 21 | 1 | 780-3018-00 | ROPS Left Front Hoop Assy Crew Cab |
| 22 | 1 | 780-3020-00 | ROPS Right Front Hoop Assy Crew Cab |
| 23 | 1 | 770-3310-00 | Crew Cab Rear Handhold Assy |
| 24 | 4 | 771-1000-00 | Seat Belt Assy-3 Point-Outside |
| 25 | 2 | 771-1005-00 | Front Center Seat Belt |
| 26 | 4 | 739-2300-00 | Seat Pin Latch Assembly |
| 27 | 8 | 618-2016-50 | 1/4-20 x 1-3/4" Hex Bolt |
| 28 | 4 | 725-4005-00 | Spacer, .75 O.D. x .400 I.D. x .500"L |
| 29 | 2 | 618-2104-00 | 3/8-16 x 4-1/2 Hex Cap Screw GR 8 |
| 30 | 6 | 618-2097-00 | 7/16-20 x 1-1/4 GR5 Hex Cap Screw |
| 31 | 4 | 618-2096-00 | 7/16-20 x 1 3/8 GR5 Shoulder Bolt |
| 32 | 10 | 613-0026-00 | 7/16-20 Nylon Insert Locknut |

# Crew Cab
# Safety Nets Assemblies

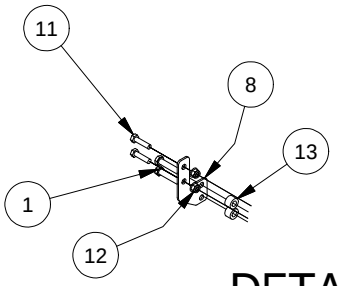


DETAIL B

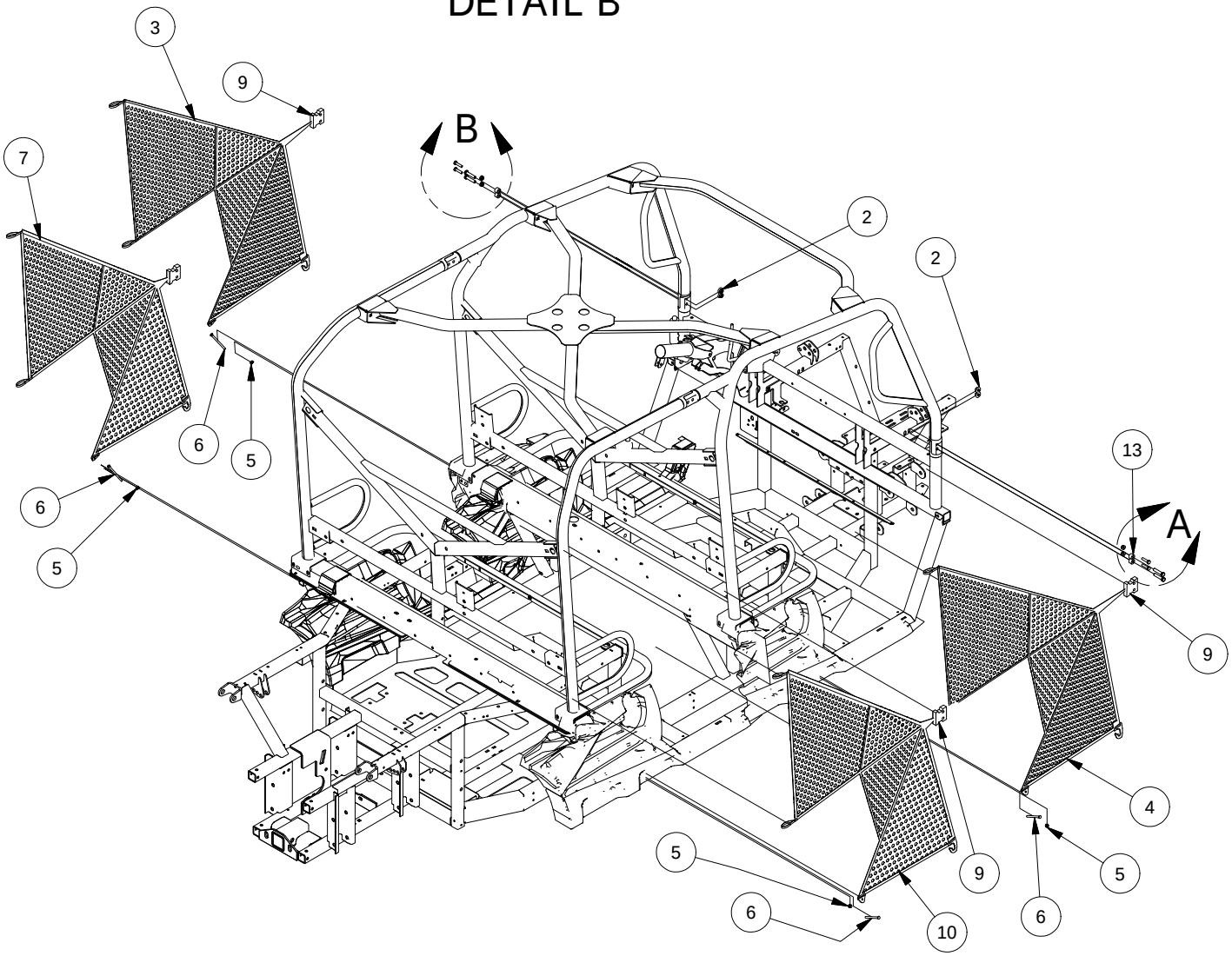


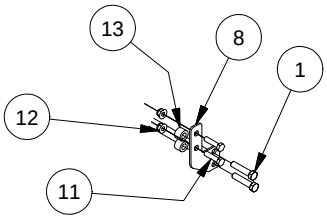


DETAIL A

| Parts List | | | |
|---|---|---|---|
| ITEM | QTY | PART NUMBER | DESCRIPTION |
| 1 | 4 | 618-2008-00 | 3/8"-16X1-3/4" Gr 8 C/S |
| 2 | 4 | 613-5201-00 | 3/8-16 Serrated Flange Nut |
| 3 | 1 | 771-1010-00 | Side Net - Left Side |
| 4 | 1 | 771-1011-00 | Side Net - Right Side |
| 5 | 8 | 613-8073-50 | 1/4-20 Nylon Insert Locknut BL |
| 6 | 4 | 618-1055-50 | 1/4-20 X3" (GRS) Carriage Bolt |
| 7 | 1 | 771-1012-00 | Rear Side Net - Left Side Intimidator |
| 8 | 2 | 739-4068-00 | Front Side Not Female Buckle Mount Brkt 2014 |
| 9 | 4 | 771-1009-00 | Side Net Buckle Set |
| 10 | 1 | 771-1013-00 | Rear Side Net - Right Side Intimidator |
| 11 | 4 | 618-1077-00 | 5/16 x 1-1/4 G8 Zn Hex Bolt |
| 12 | 4 | 613-8049-00 | 5/16-18 Nylon Insert Flange Nut Zinc Orange Nylon |
| 13 | 4 | 725-4005-00 | Spacer, .75 O.D. x .400 I.D. x .500"L |

# Bed Assembly 1

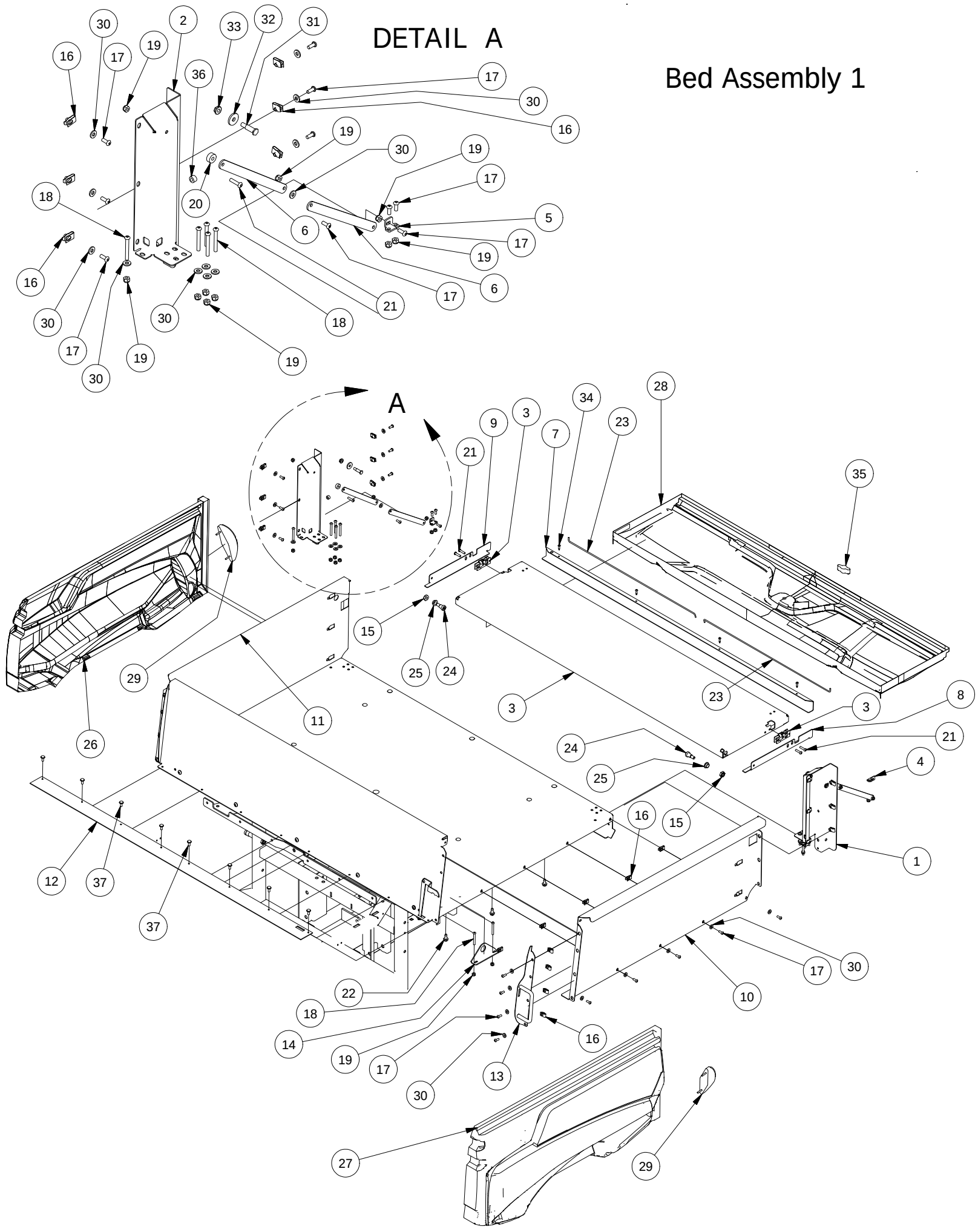

| Bed Assembly 1 | | | |
|---|---|---|---|
| ITEM | QTY | PART NUMBER | DESCRIPTION |
| 1 | 1 | 703-4008-10 | Bed Side Support-Left |
| 2 | 1 | 703-4006-10 | Bed Side Support-Right |
| 3 | 1 | 760-1010-00 | Standard bed Tail Gate Panel With Cross Brace Assembly |
| 4 | 1 | 739-4004-60 | Tailgate Support Bracket (Left) |
| 5 | 1 | 739-4002-60 | Tailgate Support Bracket (Right) |
| 6 | 4 | 739-4016-60 | Tailgate Support Arm-2500 |
| 7 | 1 | 703-4002-20 | Top Tailgate Guard-Aluminum |
| 8 | 1 | 703-4014-20 | Left TG Side Cover-Aluminum |
| 9 | 1 | 703-4012-20 | Right TG Side Cover-Aluminum |
| 10 | 1 | 703-4004-10 | Standard Bed Left Side-Steel |
| 11 | 1 | 726-4006-10 | Standard Bed Right Side-Steel |
| 12 | 1 | 712-3020-00 | Bed Dust Seal |
| 13 | 1 | 769-4002-00 | Dump Bed Handle Assy |
| 14 | 2 | 726-5001-00 | Tie Down Bracket |
| 15 | 6 | 613-0040-00 | 1/2-13 Nylon Insert Jam Locknut |
| 16 | 34 | 613-0054-00 | 1/4-20 Cage Nut |
| 17 | 43 | 618-8064-50 | 1/4-20 x 5/8 Button Socket C/S |
| 18 | 14 | 618-1060-50 | 1/4-20 X2"  Button Hd Black |
| 19 | 25 | 613-8073-50 | 1/4-20 Nylon Insert Locknut BL |
| 20 | 3 | 725-4004-00 | Spacer, .261 IDx.740 ODx.315 L |
| 21 | 7 | 618-2037-50 | 1/4-20 X1 Button Socket C/S Black |
| 22 | 6 | 618-2021-00 | 5/16" - 18 3/4" Ind Hex Washr Hd - Type F |
| 23 | 2 | 735-4000-00 | Tailgate Latch Push Rod Left |
| 24 | 2 | 618-6062-00 | 1/2" x 5/8" Soc. Shoulder Bolt |
| 25 | 2 | 632-5000-00 | 1/2 IDx 5/8 x 5/16 OIB Bushing |
| 26 | 1 | 780-2065-10 | Dump Bed Side-Right-Large UTV |
| 27 | 1 | 780-2070-10 | Dump Bed Side-Left-Large UTV |
| 28 | 1 | 780-2075-10 | Tailgate-Large UTV-Black |
| 29 | 2 | 786-0014-00 | Stop/Tail Light - Large UTV |
| 30 | 47 | 619-0010-50 | 1/4 Flat Washer Black |
| 31 | 2 | 739-7000-00 | Basket Latch Striker Post |
| 32 | 2 | 619-4010-00 | 1" ODx.307" IDx120 Flat Washer |
| 33 | 2 | 613-0031-00 | Serrated Flange nut |
| 34 | 4 | 630-2030-50 | 10 x 3/4 Pan Philips Tek Screw |
| 35 | 1 | 752-1006-00 | Dump Bed Tail gate Actuator |
| 36 | 2 | 729-1002-00 | Buttom Bumper-Tailgate-2500 |
| 37 | 8 | 618-2082-00 | Push Pin Rivet-Bed Seal |

# Bed Assembly 2

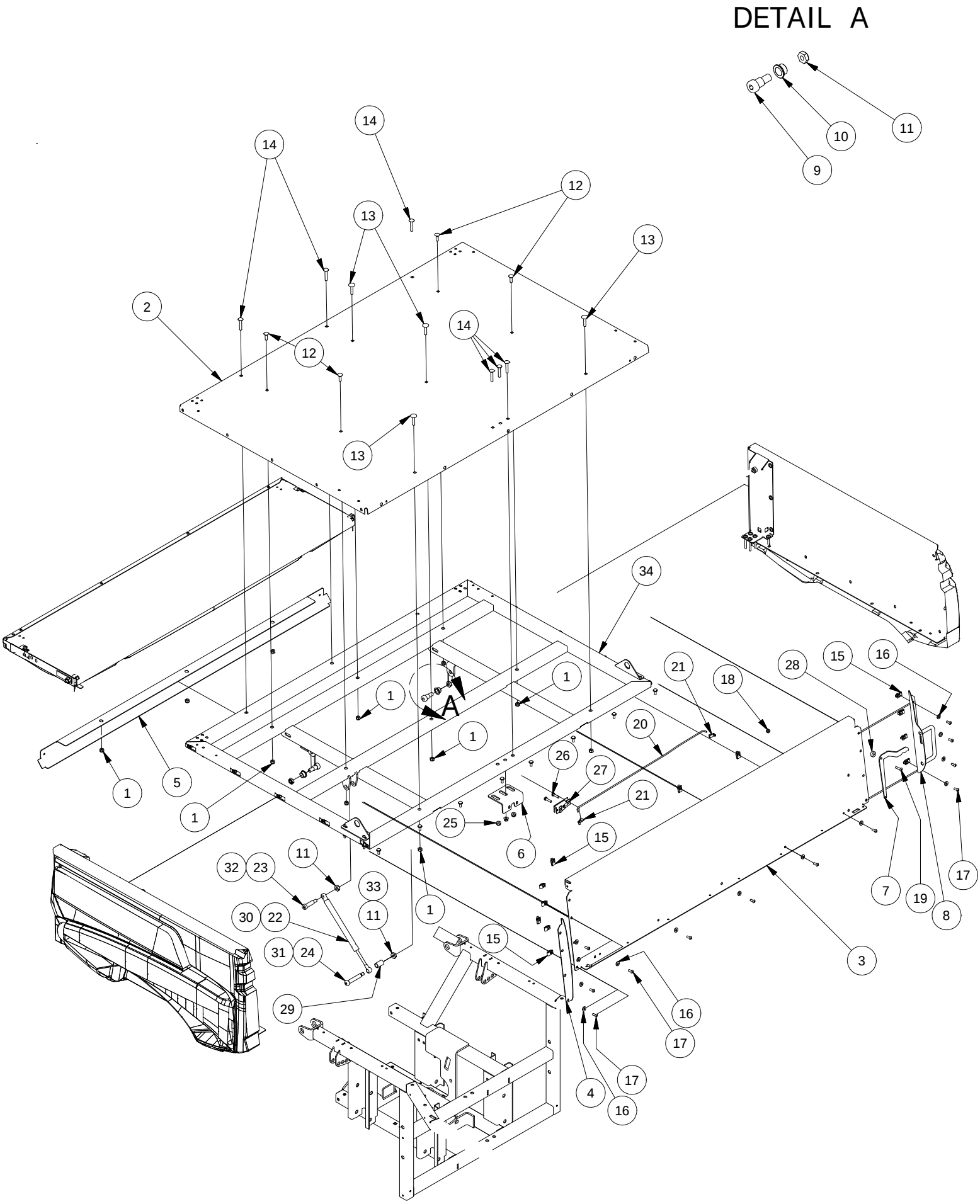

| Bed Assembly 2 | | | |
|---|---|---|---|
| ITEM | QTY | PART NUMBER | DESCRIPTION |
| 1 | 11 | 613-8047-00 | 5/16-18 Nylock HEX Nut |
| 2 | 1 | 726-4000-20 | Srandard Bed Bottom Aluminum |
| 3 | 1 | 726-4002-20 | Srandard Bed Front-Aluminum |
| 4 | 1 | 703-4009-20 | Right Bed Corner Cover-Aluminum |
| 5 | 1 | 703-4004-20 | Lower Bed Cover-Aluminum |
| 6 | 1 | 739-3406-00 | Rotary Latch Bracket-Bed (Base Model Only) |
| 7 | 1 | 769-4000-00 | Dump Bed Actuator Lever (Base Model Only) |
| 8 | 1 | 769-4002-00 | Dump Bed Handle Assy |
| 9 | 2 | 618-3001-00 | 5/8 x 5/8 Shoulder Bolt |
| 10 | 2 | 632-5052-00 | Bronze Bushing - SF- 2024-8 |
| 11 | 6 | 613-0040-00 | 1/2-13 Nylon Insert Jam Locknut |
| 12 | 4 | 618-8065-00 | 5/16-18 x 1 Carriage Bolt |
| 13 | 4 | 618-8060-00 | 5/16-16 x 1 1/2 Carriage Bolts |
| 14 | 6 | 618-4708-00 | 5/16-18 x 1-3/4 Carriage bolt |
| 15 | 34 | 613-0054-00 | 1/4-20 Cage Nut |
| 16 | 47 | 619-0010-50 | 1/4 Flat Washer Black |
| 17 | 43 | 618-8064-50 | 1/4-20 x 5/8 Button Socket C/S |
| 18 | 25 | 613-8073-50 | 1/4-20 Nylon Insert Locknut BL |
| 19 | 7 | 618-2037-50 | 1/4-20 X1 Button Socket C/S Black |
| 20 | 1 | 735-4004-00 | Dump Bed Latch Push Rod |
| 21 | 2 | 772-7000-00 | Latch Push Rod Retainer Clip |
| 22 | 1 | 735-2000-00 | Dump Bed Gas Spring-Large UTV |
| 23 | 1 | 618-2020-00 | 12"X1-1/2" Shoulder Bolt |
| 24 | 1 | 618-2047-00 | 1/2"x 2-1/2" Shoulder Bolt |
| 25 | 3 | 613-8049-00 | 5/16-18 Nylon Insert Flange Nut Zinc Orange Nylon |
| 26 | 2 | 618-4007-00 | 1/4-20 x 1 Grade 5 Hex bolts Zinc |
| 27 | 1 | 752-1004-00 | Dump Bed Rotary Latch |
| 28 | 3 | 725-4004-00 | Spacer, .261 IDx.740 ODx.315 L |
| 29 | 1 | 725-1009-00 | Pedal Spring Spacer LRG UTV 1-1/8 spacer |
| 30 | 1 | 735-2010-00 | Dump Bed Actuator-2500 Series (XD4 Models Only) |
| 31 | 1 | 618-6068-00 | 1/2" X 4" Shoulder Bolt (XD4 Models Only) |
| 32 | 1 | 618-6066-00 | 1/2-13 X 2-1/4 Hex C/S GR8 (XD4 Models Only) |
| 33 | 1 | 613-5202-00 | 3/8-16 Nylock Flange Nut (XD4 Models Only) |
| 34 | 1 | 770-3016-00 | Standard Bed Frame Assy |

1000cc Left
791-2014-00 Orange
791-2014-10 Gray
791-2014-20 O.D. Green

1000cc Right
791-2015-00 Orange
791-2015-10 Gray
791-2015-20 O.D. Green

Decal Warning Cluster-2500
791-2030-00

4X4 Right
791-2023-00 Orange
791-2023-10 Gray
791-2023-20 O.D. Green

XD4 Right
791-2025-00 Orange
791-2025-10 Gray
791-2025-20 O.D. Green

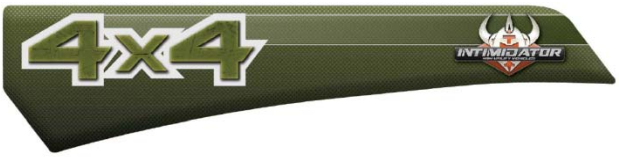


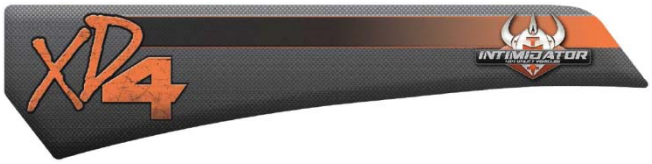


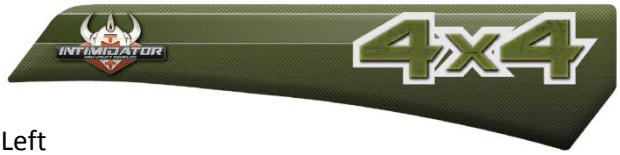


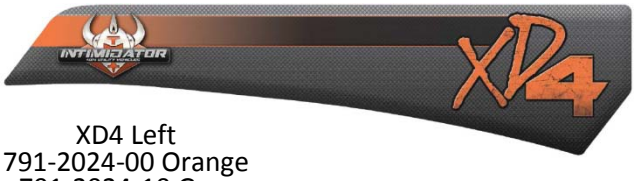


4X4 Left
791-2022-00 Orange
791-2022-10 Gray
791-2022-20 O.D. Green

XD4 Left
791-2024-00 Orange
791-2024-10 Gray
791-2024-20 O.D. Green

Dash Intimidator
791-2020-00 Orange
791-2020-10 Gray
791-2020-20 O.D. Green

Tailgate Intimidator
791-2026-00 Orange
791-2026-10 Gray
791-2026-20 O.D. Green

Muffler Hot Warning Label
791-1000-00

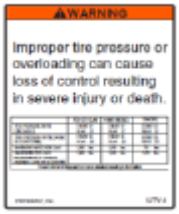


Load Rating Label, Crew
791-2036-00

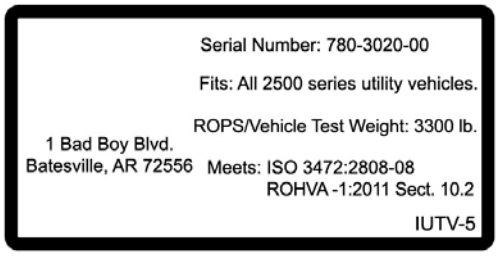


ROPS Decal
791-2096-00

Camo XD4 Decal
791-2098-00

Camo 4x4 Decal
791-2097-00

Helmet Logo Decal
491-2099-00