Intimidator UTV Part Manual

Crew Cab 750cc Gas EFI

www.IntimidatorUTV.com

Table of Contents

Front Suspension Assembly **3**

Parts List 4

Light and Brake Assemblies 5

Parts List 6

Frame Assembly 7

Parts List 8

Plastic Assembly 9

Parts List 10

Engine Compartment 11

Parts List 12

Rear Suspension 13

Parts List 14

Safety Side Nets 15

Roll Cage Assembly 16

Parts List 17

Bed Assembly (1 of 2) 18

Parts List 19

Bed Assembly (2 of 2) 20

Parts List 21

Decals 22

Front Suspension Assembly

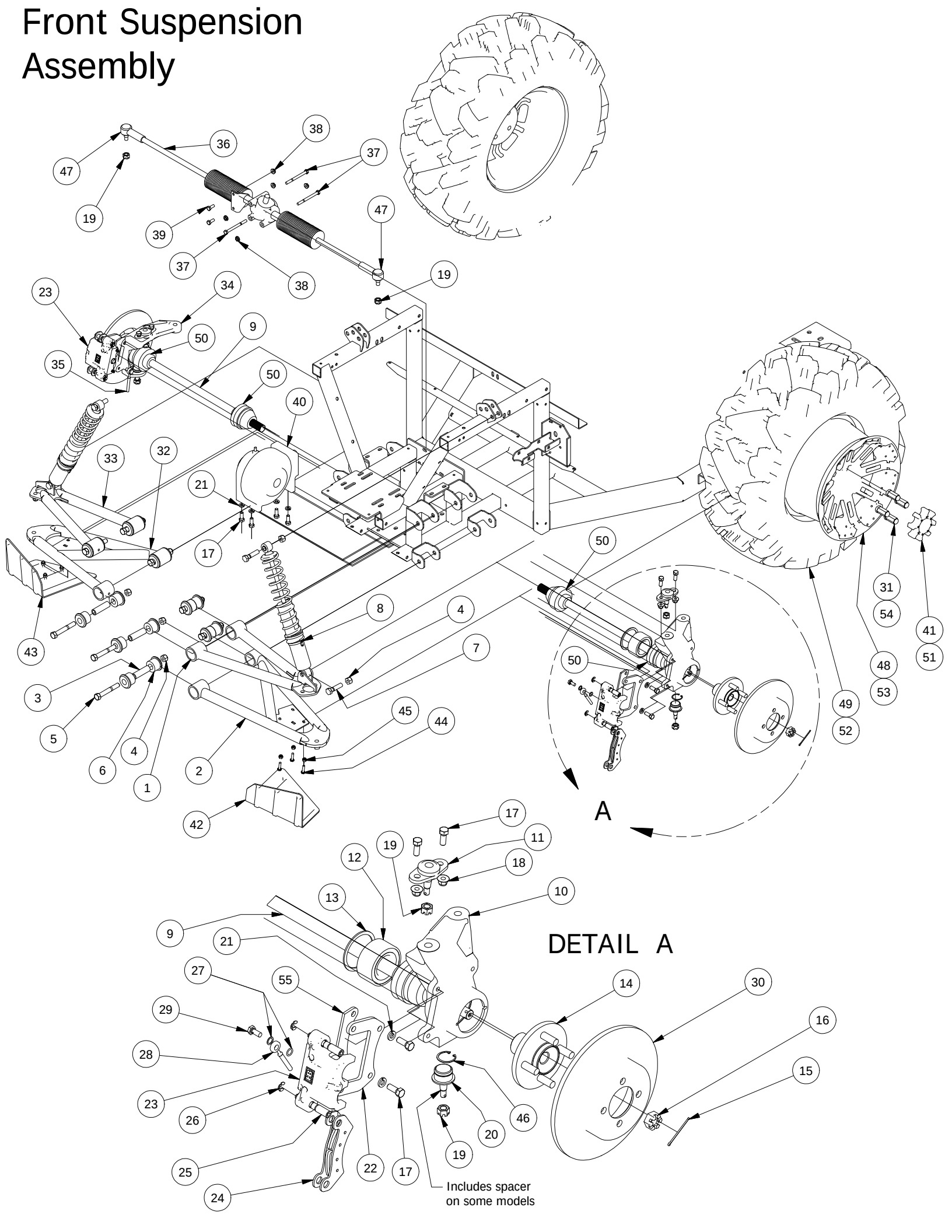

Parts List			
ITEM	QTY	PART NUMBER	DESCRIPTION
1	1	787-3201-00	Left Front Upper A-arm Assy
2	1	787-3203-00	Left Front Lower A-Arm Assy
3	8	732-2001-00	Large MTV A-Arm Bushing Sleeve
4	12	613-6037-00	1/2-13 Nylon Insert Locknut
5	8	618-2006-00	1/2" - 13X3-1/2" Hex Bolt Gr 5
6	16	732-2000-00	Large MTV A-Arm Bushing
7	4	618-5049-00	1/2-13 x 2 GR5 Hex Bolt Zinc
8	2	787-2005-00	Front Shock-Kohler 25 Lg UTV
9	2	737-2029-00	Half-Shaft - Front Large UTV
10	1	737-2020-00	Spindle, Left Front-Large UTV
11	2	799-2003-00	Ball Joint-Spindle-Upper High Strength
12	2	710-2002-00	Spindle Bearing LRG UTV
13	2	710-2003-00	Retaining Ring-Spindle Bearing
14	2	786-2000-00	Hub-Large UTV
15	2	765-1016-00	Rear Hub Castle Nut Cotter Pin
16	2	765-1012-00	Rear Hub Castle Nut
17	12	618-6049-00	3/8-16 X 1 GR 5 Hex Bolts Zinc
18	4	613-5202-00	3/8-16 Nylock Flange Nut
19	6	613-2003-00	M12 X 1.25 Castle Nut
20	2	799-2000-00	Ball Joint-Spindle-Lower
21	8	619-0013-00	3/8" Zn Lock Washer
22	2	739-2050-00	Brake Caliper Brkt-Adrenalin
23	2	716-2005-00	Brake Caliper Assy-Large UTV
24	2	716-2006-00	Brake Pad, Large UTV
25	2	716-2007-00	Brake Caliper Slide Pin
26	2	716-2008-00	Caliper Assy Snap Ring-Adrenalin
27	4	616-1025-00	10 mm copper crush washer
28	1	716-3002-00	Brake Line Front Left-Lg UTV
29	2	616-1015-00	Banjo Bolt M 10mm x 1.0
30	2	716-2000-00	Rotor - Large UTV
31	8	613-0001-00	1/2 Lug Nut-44011- Front
32	1	787-3202-00	Right Front Lower A-Arm Assy
33	1	787-3200-00	Right Front Upper A-Arm Assy
34	1	737-2022-00	Spindle, Right Front-Large UTV
35	1	716-3000-00	Brake Line Front Right-Lg UTV
36	1	731-3000-00	Rack & Pinion, Large MTV
37	3	618-2060-00	5/16-18 X 3 1/2 GR 5 Hex Bolts Zinc
38	5	613-9002-00	5/16-18 Hex Flange Nuts Zinc w/Serations
39	2	618-8063-00	5/16-18 x 3/4 GR 5 Hex bolt Zinc
40	1	756-3000-00	Front Differential-Larg UTV
41	2	722-4004-00	Wheel Center Cap-Lockout Wheel
42	1	780-2206-00	Left A Frame Guard-2500
43	1	780-2207-00	Right A Frame Guard-2500
44	6	618-4007-00	1/4-20 x 1 Grade 5 Hex bolts Zinc
45	6	613-8073-00	1/4-20 Nylon Insert Locknut Zinc Orange Nylon
46	2	799-2001-00	Retaining Ring-Lg MTV Ball Jt
47	2	710-1014-00	Tire Rod End-Intimidator
48	2	722-4000-00	Wheel-Lockout 14X7-4" Black SP
49	2	722-4106-00	DUO-Trax 26X9R146 Ply Tire
50	4	712-3222-00	Half Shaft CV Boot Kit
51	2	722-4110-00	2500 Steel Wheels Center Cap (Base Model Only)
52	2	722-4112-00	Black Rock Tire-27x9xR14 Front (Base Model Only)
53	2	722-4006-00	4X4 Steel Front Wheel-Black (Base Model Only)
54	8	713-1012-50	Open End Lug Nut-Black (Base Model Only)
55	2	725-3210-00	Caliper Brake Mount Spacer

Lights and Brake Assemblies

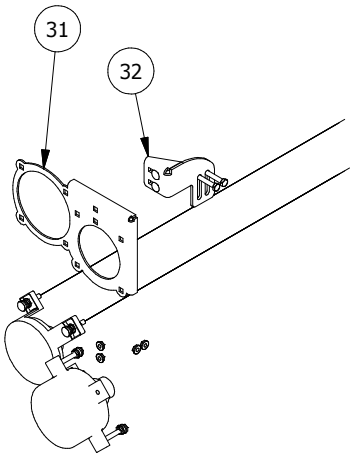

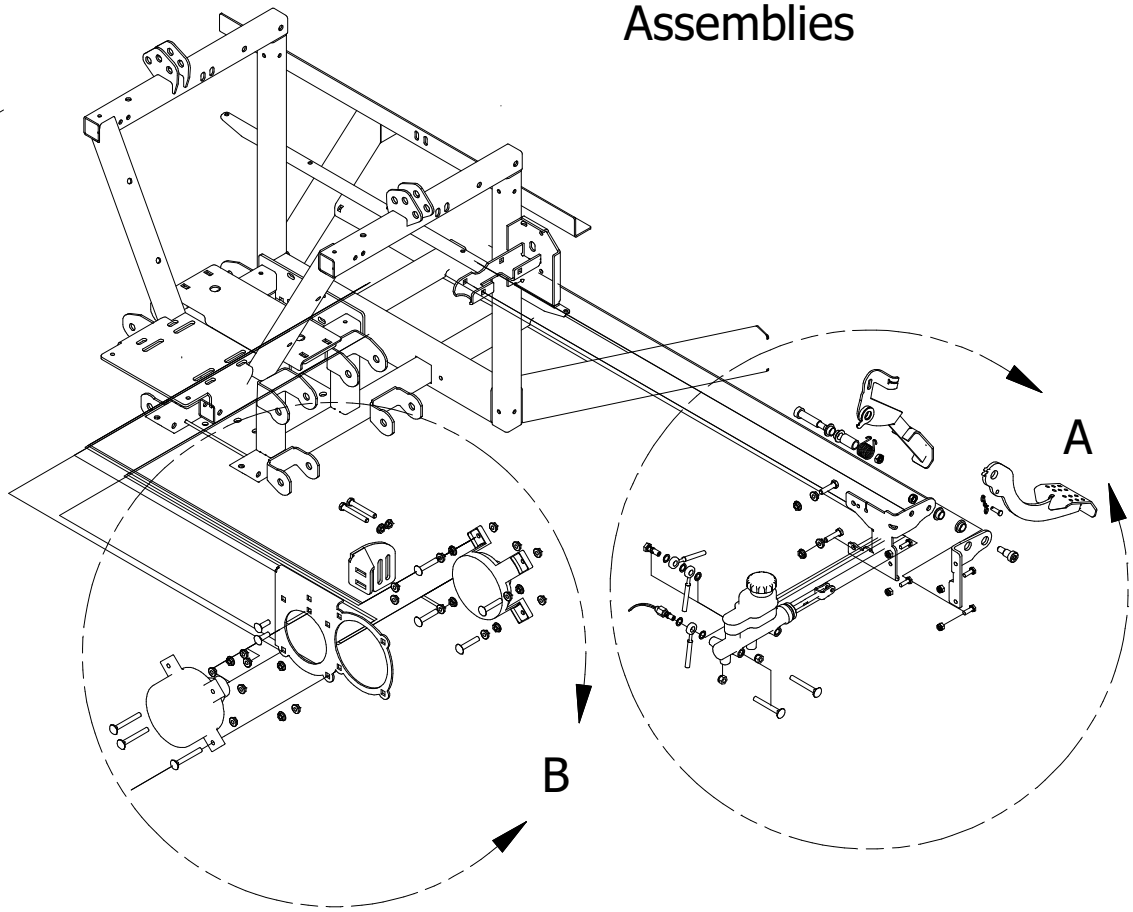

DETAIL B

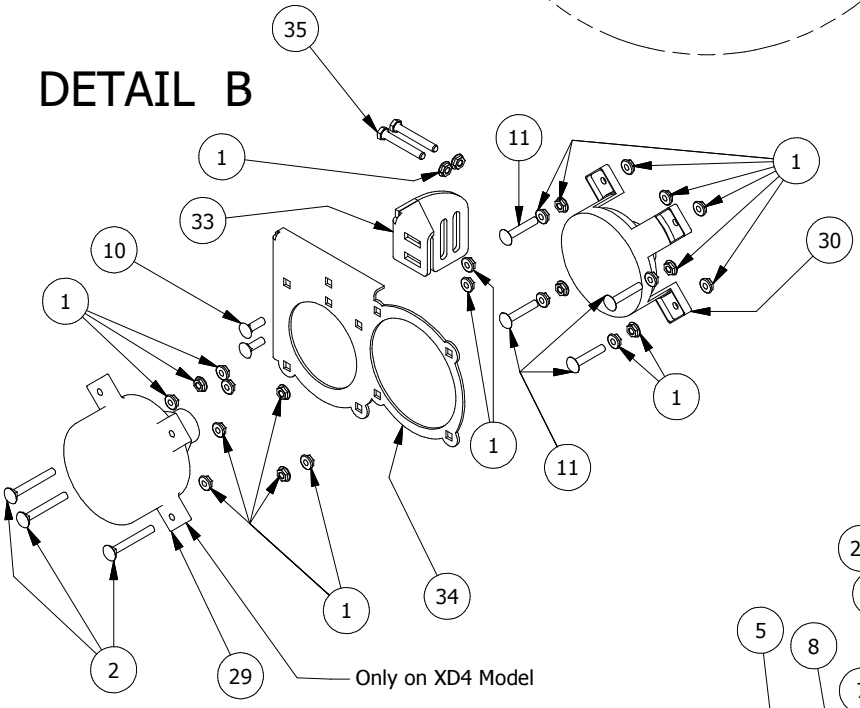

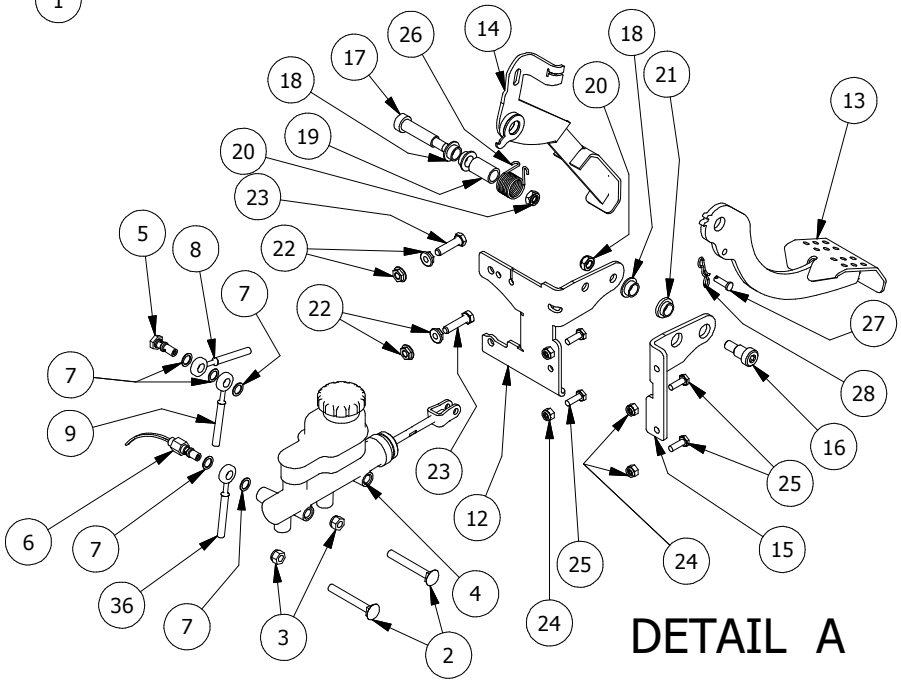

DETAIL A

Lights and Brake Assemblies			
ITEM	QTY	PART NUMBER	DESCRIPTION
1	51	613-9002-00	5/16-18 Hex Flange Nuts Zinc w/Serations
2	8	618-2019-00	5/16" - 18 X 2-1/2" Carriage Bolt
3	2	613-8047-00	5/16-18 Nylock HEX Nut
4	1	716-1000-00	Master Cylinder, Dual Cylinder
5	1	716-1017-00	Banjo Bolt-Double-10mm-1.0
6	1	777-1011-00	Brake Switch-Banjo-2012
7	5	616-1025-00	10 mm copper crush washer
8	1	716-3000-00	Brake Line Front Right-Lg UTV
9	1	716-3002-00	Brake Line Front Left-Lg UTV
10	4	618-8065-00	5/16-18 x 1 Carriage Bolt
11	8	618-4708-00	5/16-18 x 1-3/4 Carriage bolt
12	1	739-4202-00	Brake Pedal Bracket-Right-2500
13	1	716-2012-00	Brake Pedal Assy-Large UTV
14	1	755-1002-00	Accelerator Pedal Assy-Lg UTV
15	1	739-4200-00	Brake Pedal Bracket Left-2500
16	1	618-6062-00	1/2" x 5/8" Soc. Shoulder Bolt
17	1	618-6064-00	12"X1-3/4" Shoulder Bolt
18	3	632-5000-00	1/2 IDx 5/8 x 5/16 OIB Bushing
19	1	725-1009-00	Pedal Spring Spacer LRG UTV 1-1/8 spacer
20	2	613-2004-00	3/8"-16 Nyloc Jam Nut
21	1	732-2003-00	Bushing, Oil Impregnated
22	4	613-9002-00	5/16-18 Hex Flange Nuts Zinc w/Serations
23	2	618-2029-00	5/16" x 1-1/4" Hex C/S Gr 5
24	4	613-8073-00	1/4-20 Nylon Insert Locknut Zinc Orange Nylon
25	4	618-8052-00	1/4-20 x 3/4 Grade 5 Hex bolts Zinc
26	1	734-2004-00	Spring-Accelerator Pedal
27	1	620-1000-00	Clevis Pin, 1/4" x 3/4"
28	1	620-1002-00	Bow Tie Clip
29	2	786-0016-00	Headlight-High Beam-Large UTV
30	2	786-0015-00	Headlight-Low Beam-Large UTV
31	1	739-4054-00	Head Light Bracket-Right
32	1	739-4058-00	Head Light Bracket Brace-Right
33	1	739-4056-00	Head Light Bracket Brace-Left
34	1	739-4052-00	Head Light Bracket-Left
35	4	618-2041-00	5/16" x 2-1/4" Hex Hd Cap Scr.
36	1	716-3012-00	Brake line W/Crimped Tee-Truck

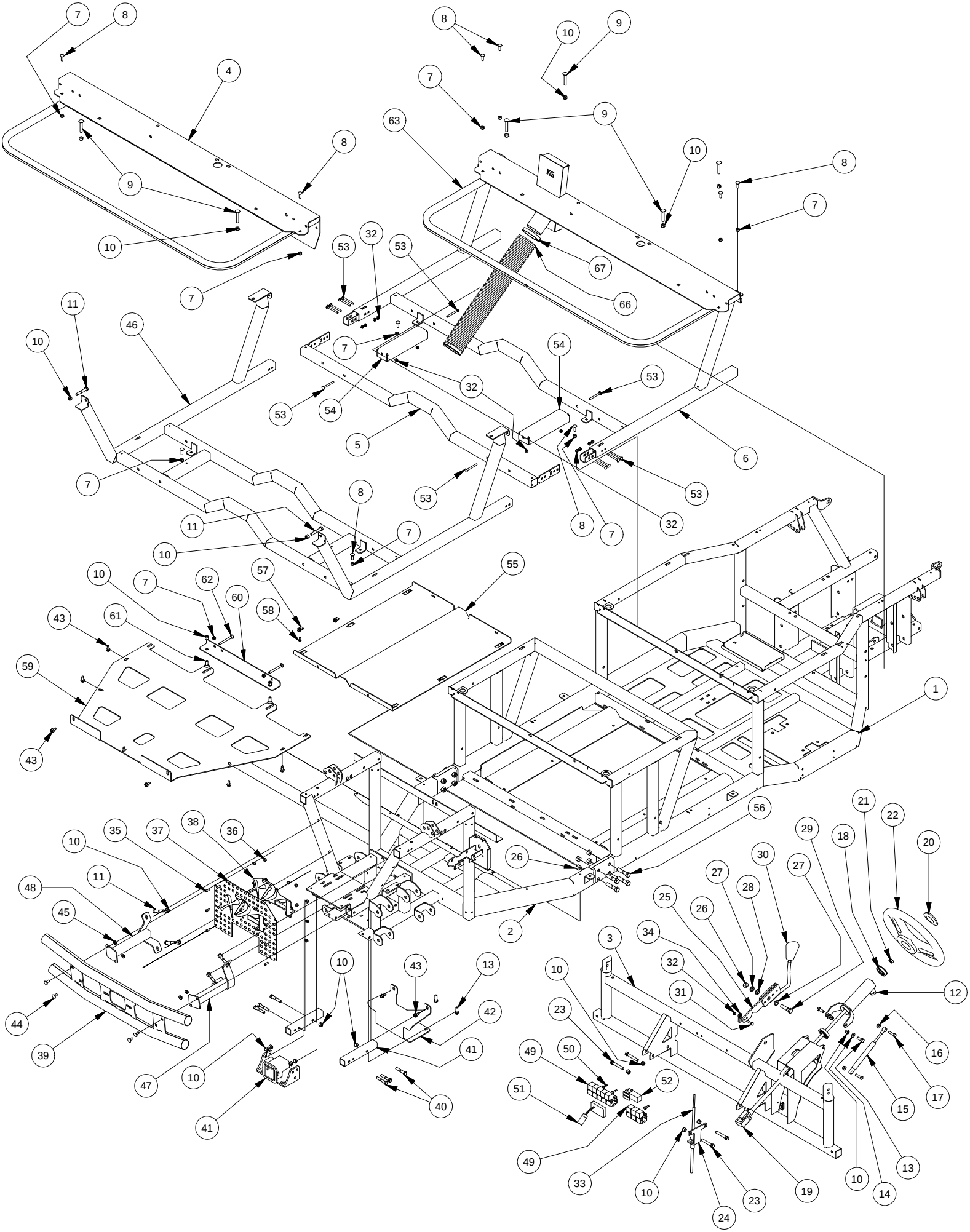
7
8
4
9
10
63
53
32
54
67
66
11
46
5
6
55
57
58
62
60
61
43
59
1
56
21
22
20
29
18
30
27
28
25
26
34
3
31
12
16
17
15
13
14
19
24
23
33
52
51
49
50
2
35
37
38
36
48
45
44
39
47
41
42
40

Parts List			
ITEM	QTY	PART NUMBER	DESCRIPTION
1	1	770-3010-00	Crew Cab Rear Frame Assy-Gas
2	1	770-3011-00	Front Frame-Truck/Crew Cab
3	1	770-3002-00	Dash Support Assy
4	1	770-3306-00	Front Seat Frame Assembly Crew Cab
5	1	770-3003-00	Floor Board Support Rear Center Tube Assy
6	1	770-3001-00	Crew Cab Rear Floor Board Support Assy
7	12	613-8047-00	5/16-18 Nylock HEX Nut
8	10	618-8065-00	5/16-18 x 1 Carriage Bolt
9	6	618-2023-00	3/8"-16 x 2-1/4" Carriage Bolt
10	26	613-5041-00	3/8-16 Nylon Insert Locknut
11	6	618-2022-00	3/8" - 16 X 2-1/4" Hex Bolt
12	1	731-1200-00	Steering Column Assy- Large UTV
13	4	618-6049-00	3/8-16 X 1 GR 5 Hex Bolts Zinc
14	2	619-0012-00	3/8 ID x 1/8 Plastic Washer
15	1	735-2005-00	Tilt Steering Gas Spring
16	2	613-8049-00	5/16-18 Nylon Insert Flange Nut Zinc Orange Nylon
17	2	618-1077-00	5/16 x 1-1/4 G8 Zn Hex Bolt
18	2	610-2000-00	Steering Column Bearing
19	1	737-5002-00	Steering Shaft Assembly-Large UTV
20	1	722-2502-00	Steering Wheel Cap-Hurricane
21	1	737-5003-00	Steering Shaft Wheel Nut
22	1	722-2500-00	Steering Wheel Large UTV
23	4	618-2069-00	3/8" - 16 X 2-1/2" Hex Hd Cap Screw
24	1	739-3364-00	Upper Shift Cable Bracket
25	1	769-3000-00	Shift Lever Assembly 2500 Series
26	9	613-6037-00	1/2-13 Nylon Insert Locknut
27	2	732-2003-00	Bushing, Oil Impregnated
28	1	632-5000-00	1/2 IDx 5/8 x 5/16 OIB Bushing
29	1	618-5049-00	1/2-13 x 2 GR5 Hex Bolt Zinc
30	1	745-2000-00	Shift Lever Knob-Large UTV
31	1	618-4007-00	1/4-20 x 1 Grade 5 Hex bolts Zinc
32	13	613-8073-00	1/4-20 Nylon Insert Locknut Zinc Orange Nylon
33	1	764-2004-00	Gear Shift Cable-Large UTV
34	1	799-1002-00	1/4-28, Right Hand Thread Heim
35	11	618-8064-50	1/4-20 x 5/8 Button Socket C/S
36	11	613-8073-50	1/4-20 Nylon Insert Locknut BL
37	1	726-4060-00	Front Grill-XD4
38	1	726-4062-00	XD4 Grill Backer Plate
39	1	793-3200-00	Brush Guard Assy-Std-2500
40	6	618-2024-00	3/8 -16 X 2" Hex Bolt
41	1	793-3210-00	Front Receiver Assembly
42	1	726-3210-00	Brush Guard Skid Plate
43	9	618-2021-00	5/16" - 18 3/4" Ind Hex Washr Hd - Type F
44	4	618-8062-00	5/16-18x3/4 Carriage Bolts Zinc
45	4	613-9002-00	5/16-18 Hex Flange Nuts Zinc w/Serations
46	1	770-3005-00	Floor Board Support Assembly Crew Cab Front
47	1	739-3220-00	Brush Guard Mtg Brkt-Left
48	1	739-3221-00	Brush Guard Mtg Brkt-Right
49	8	786-0005-00	12 Volt Cube Relay
50	3	630-7040-00	1/4 x 1 Hex Head Tek Screw
51	1	786-2002-00	PMW Controller, Team Rear Diff
52	1	715-3106-00	Glow plug module
53	12	618-2045-00	1/4-20 x 2 1/2 Carriage Bolt
54	2	703-3342-00	Floor Board Support Rear Cross Brace Crew Cab
55	1	726-4014-00	Truck Series Skid Plate
56	8	618-6018-00	1/2" - 13 X 2-1/4" C/S Gr 8
57	6	613-0054-00	1/4-20 Cage Nut
58	6	618-8064-00	1/4-20 x 5/8 Buttonhead Socket C/S 18-8 SS
59	1	726-4012-00	Skid Plate-Gas 2500
60	1	739-3902-00	Truck Series Skid Plate Front Brkt
61	2	618-2011-00	3/8 - 16 X 1" Carriage Bolt
62	2	618-0002-00	5/16-18 X 3 CARRIAGE BOLT ZC
63	1	770-3007-00	Seat Frame Assy Kohler 750 2014
66	1	751-1010-00	3" Flex Hose
67	2	772-2015-00	1-15/16 to 2 - 1/2 Hose Clamp

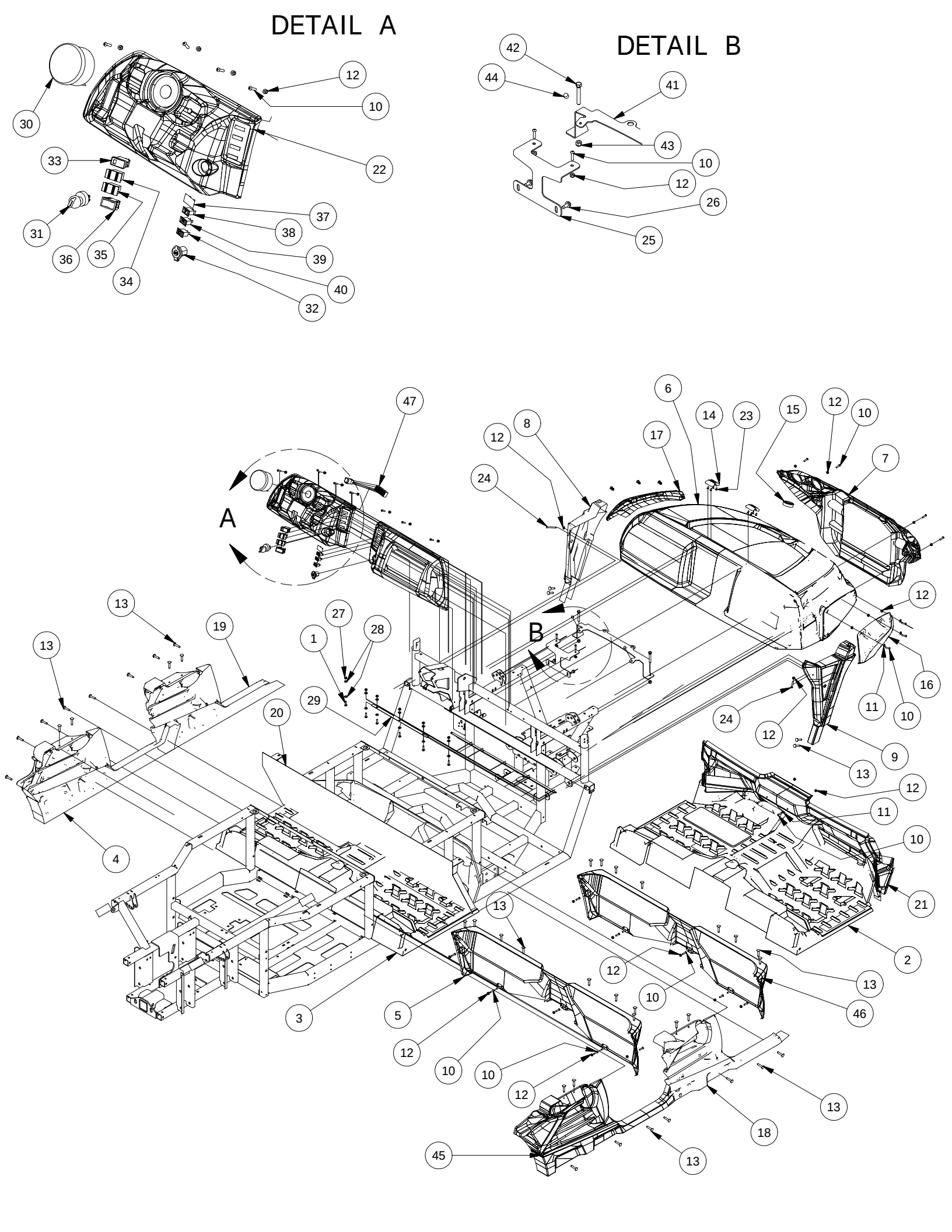
DETAIL A
DETAIL B
A
B
1
2
3
4
5
6
7
8
9
10
11
12
13
14
15
16
17
18
19
20
21
22
23
24
25
26
27
28
29
30
31
32
33
34
35
36
37
38
39
40
41
42
43
44
45
46
47

Parts List			
ITEM	QTY	PART NUMBER	DESCRIPTION
1	18	618-4007-00	1/4-20 x 1 Grade 5 Hex bolts Zinc
2	1	780-2015-10	Floor Board-Large UTV-Black
3	1	780-2210-10	Rear Floor Board Crew Cab
4	1	780-2030-10	Seat Panel Left-Large UTV-Blk
5	1	780-2020-00	Center Seat Panel-Large UTV-Or
6	1	780-2000-00	Hood Large UTV-Orange
7	1	780-2060-10	Front Grill-Large UTV-Black
8	1	780-2055-10	Lower Front Fender Flare-Left
9	1	780-2050-10	Lower Front Fender Flare-Right
10	31	618-2037-50	1/4-20 X1 Button Socket C/S Black
11	8	619-0010-50	1/4 Flat Washer Black
12	33	613-8073-50	1/4-20 Nylon Insert Locknut BL
13	44	640-6080-00	Chistmas Tree Plug
14	2	653-5010-00	Hood Hinge
15	1	652-5000-00	Hood Latch
16	1	780-2040-10	Upper Front Fender Flare-Right
17	1	780-2045-10	Upper Front Fender Flare-Left
18	1	780-2209-10	Passenger Front Kick PNL. 4PSG
19	1	780-2208-10	Driver Front Kick PNL. 4PSG
20	1	780-2211-00	Front Seat Back Crew Cab
21	1	780-2010-10	Front Firewall-Large UTV-Black
22	1	780-2035-00	Dash/Glovebox Assy-Large UTV
23	8	630-2050-00	M5-.8 x 10 Pan Phil M/S Zinc
24	2	618-1060-50	1/4-20 X2" Button Hd Black
25	1	739-2056-00	Upper Hood Support Brkt-Kholer/Electirc
26	2	618-2021-00	5/16" - 18 3/4" Ind Hex Washr Hd - Type F
27	6	613-9001-00	1/4-20 Hex Flange Nuts Zinc W/Serrations
28	12	619-0010-00	1/4 USS Flat Washer 18-8 SS
29	1	726-3242-00	Firewall Mount Brkt
30	1	786-2020-00	Speedometer/Display Gauge
31	1	777-1000-00	Ignition Switch
32	1	677-2075-00	12 Volt Auxilliary Plug
33	1	786-2038-00	4WD Switch
34	1	786-2034-00	Head Light Hi/off/Low Beam Sw.
35	1	786-2030-00	Differential Lock Switch
36	1	786-2036-00	Dump Bed Up/Down Switch
37	1	786-2040-00	Panel Plug-Eaton Blank Switch
38	1	788-1005-00	High Engine Temp Ind. Light
39	1	788-1008-00	Filter Plugging Ind. Light
40	1	788-1006-00	Engine Fault Indicator Light
41	1	739-3374-00	Upper Radiator Mounting Brkt
42	2	618-2069-00	3/8" - 16 X 2-1/2" Hex Hd Cap Screw
43	2	613-5041-00	3/8-16 Nylon Insert Locknut
44	2	729-1002-00	Buttom Bumper-Tailgate-2500
45	1	780-2025-10	Seat Panel Right-Large UTV-Blk
46	1	780-2212-00	Front Seat Box 4 Seater
47	1	786-2011-00	Wiring Harness-750 EFI Gas

Kohler Engine Assembly

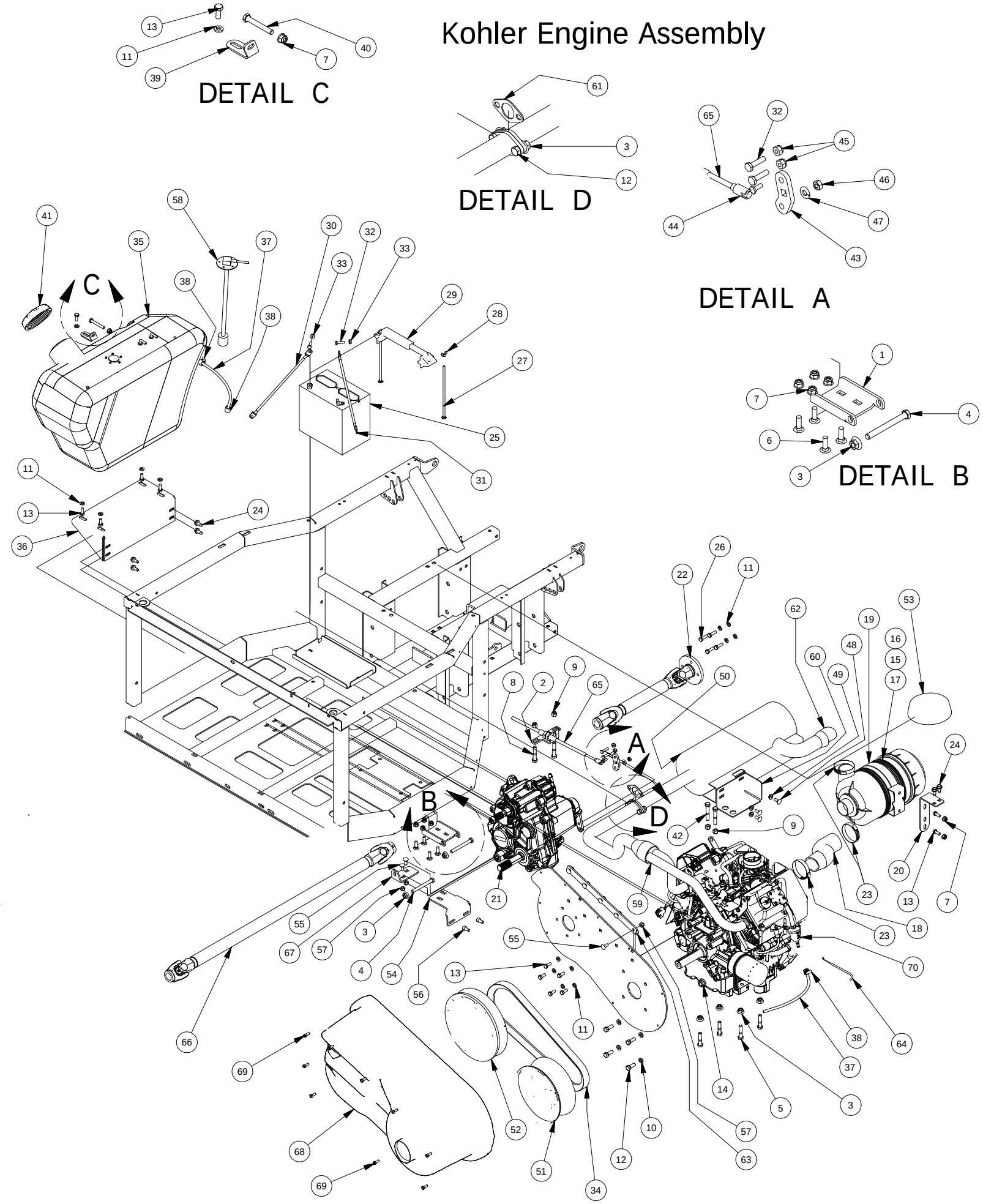

Kohler Engine Assembly			
ITEM	QTY	PART NUMBER	DESCRIPTION
1	1	739-3368-00	Lower Transmission Mounting Brkt
2	1	739-3366-00	Lower Shift Cable Bracket
3	8	613-5201-00	3/8-16 Serrated Flange Nut
4	2	618-2025-00	3/8" -16 X 3-1/2" hex C/S-Gr5
5	4	618-6050-00	3/8-16 x 1-3/4 Hex Bolt Zinc
6	4	618-8065-00	5/16-18 x 1 Carriage Bolt
7	7	613-8049-00	5/16-18 Nylon Insert Flange Nut Zinc Orange Nylon
8	2	618-2024-00	3/8 -16 X 2" Hex Bolt
9	4	613-5041-00	3/8-16 Nylon Insert Locknut
10	4	619-0013-00	3/8" Zn Lock Washer
11	14	619-8051-00	5/16 Lockwasher Zinc
12	6	618-6049-00	3/8-16 X 1 GR 5 Hex Bolts Zinc
13	12	618-8063-00	5/16-18 x 3/4 GR 5 Hex bolt Zinc
14	1	715-3004-00	Kohler 750 EFI Engine Package
15	1	763-1001-00	Air Filter
16	1	763-1002-00	Air Box Cap
17	1	763-1000-00	Air Box Assembly
18	1	736-2004-00	Intake Adapter Hose-750 EFI Kohler
19	1	772-1100-00	Air Canister Clamp
20	1	739-3370-00	Air Filter Bracket
21	1	737-3000-00	Transmission
22	1	737-2024-00	Rear Drive Shaft-Gas Lg UTV's Kohler & Weber
23	3	672-9052-00	1-15/16 to 2 - 1/2 Hose Clamp
24	6	618-2021-00	5/16" - 18 3/4" Ind Hex Washr Hd - Type F
25	1	768-1000-00	12 Volt Battery
26	4	618-1080-00	5/16-18 x 1" GR 8 Hex bolt
27	2	018-8050-00	1/4-20 x 8 Carriage Bolt Zinc
28	2	013-8051-00	1/4-20 Wing Nut Zinc
29	1	643-8929-98	Battery Hold Down
30	1	664-0025-00	39" Battery Cable 2 Gauge
31	1	664-1045-00	21" Battery Cable 2 Gauge
32	4	618-4007-00	1/4-20 x 1 Grade 5 Hex bolts Zinc
33	2	613-9001-00	1/4-20 Hex Flange Nuts Zinc W/Serrations
34	1	741-1004-00	CVT Belt-Kohler 750 EFI
35	1	767-1998-00	Gas Tank-Kohler 750 EFI
36	1	739-2058-00	Lower Fuel Tank Support Brkt
37	2	751-1014-00	1/4 Fuel Line - Low Perm
38	3	672-8067-00	Hose Clamp No. 4 - 7/32 - 5/8
39	1	739-2059-00	Upper Fuel Tank Support Brkt
40	1	618-2041-00	5/16"-18 x 2-1/4" Hex Cp Screw Gr5
41	1	767-2002-00	Fuel Tank Cap-Lg UTV-Gas
42	2	618-2022-00	3/8" - 16 X 2-1/4" Hex Bolt
43	1	739-3376-00	Team Trans Shift Lever Ext
44	1	710-1038-00	1/4" X 28 Quick Disc. Rod End
45	2	613-8073-00	1/4-20 Nylon Insert Locknut Zinc Orange Nylon
46	1	613-0028-00	1/4-28 Hex Nut
47	1	619-4008-00	1/4 Lock Washer Zinc
48	3	618-8062-50	5/16-18x3/4 Carriage Bolts Black Zinc
49	3	613-9002-00	5/16-18 Hex Flange Nuts Zinc w/Serations
50	1	715-3012-00	Muffler-Kohler 750 EFI & Diesel
51	1	770-1012-00	CVT Driver Pulley-Kohler 750 EFI
52	1	770-1014-00	CVT Driven Pulley-Kohler 750 EFI
53	1	763-2012-00	Rain Cap- Air Filter
54	1	739-2060-00	Motor/Transmission Bracket
55	7	618-8062-00	5/16-18x3/4 Carriage Bolts Zinc
56	2	618-2005-00	M8x1.25x16 Soc Hd Cap Scr-Zinc
57	7	613-8047-00	5/16-18 Nylock HEX Nut
58	1	786-2004-00	Fuel Sender
59	1	715-3010-00	Exhaust Mainfild-Kohler 750 EFI
60	1	739-2064-00	Muffler Mount Bracket
61	1	712-3014-00	Exhaust Hdr Gasket-Diesel/Muff
62	1	715-3016-00	Spark Arrestor Kit for Muffler
63	1	726-3233-00	CVT Backplate Stiffener, Kohler EFI
64	1	764-2008-00	Throttle Cable-750 EFI Ext Bed
65	1	764-2006-00	Gear Shift Cable-2500 Ext Bed
66	1	737-2031-00	750 EFI/ Diesel Ext Bed TRK Series
67	1	739-2063-00	Motor/Transmission Bracket Upper Brkt-750EFI
68	1	714-3006-00	CVT Cover Kohler 750 EFI
69	9	618-5006-00	1/4 X 5/8 hex head tri-lobe thread forming bolt
70	1	715-3206-00	Fuel Filter 750 EFI

Rear Suspension Assembly

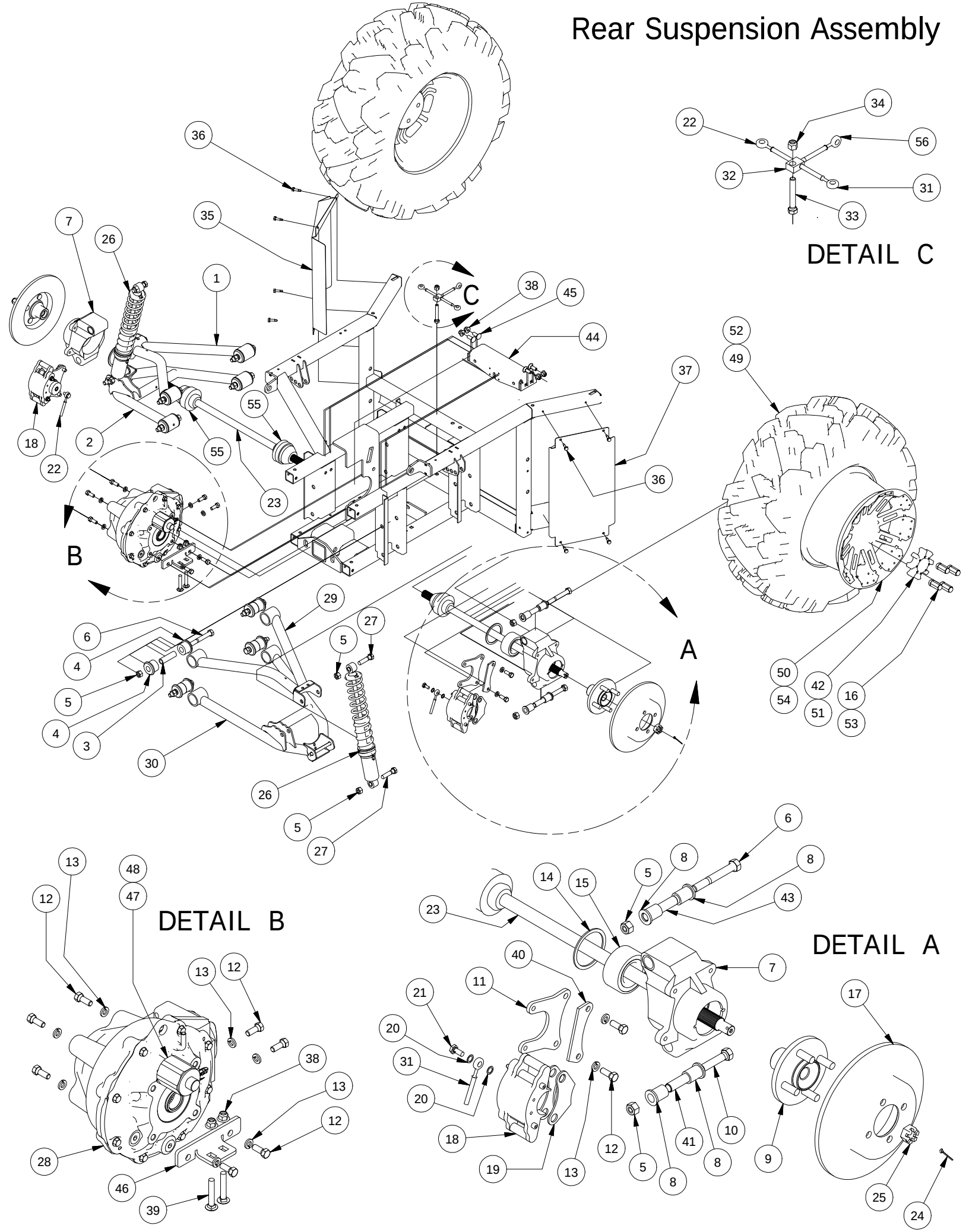

Parts List			
ITEM	QTY	PART NUMBER	DESCRIPTION
1	1	787-3210-00	Extended Left Rear Upper A-arm Assy
2	1	787-3212-00	Extended Left Rear Lower A-arm Assy
3	8	732-2001-00	Large MTV A-Arm Bushing Sleeve
4	16	732-2000-00	Large MTV A-Arm Bushing
5	16	613-6037-00	1/2-13 Nylon Insert Locknut
6	10	618-2000-00	1/2" - 13 X 3-3/4" C/S Gr 5
7	2	787-2000-00	Independent Rear Suspension
8	8	710-2000-00	Flange BUSHING-Large UTV
9	2	786-2000-00	Hub-Large UTV
10	2	618-2030-00	1/2" -13 x 4.5" Hex Cap Screw
11	2	639-0054-00	Brake Caliper Brkt-Ausco-Elect
12	11	618-6049-00	3/8-16 X 1 GR 5 Hex Bolts Zinc
13	11	619-0013-00	3/8" Zn Lock Washer
14	2	710-2003-00	Retaining Ring-Spindle Bearing
15	2	710-2002-00	Spindle Bearing LRG UTV
16	8	613-0001-00	1/2 Lug Nut-44011- Front
17	2	716-2000-00	Rotor - Large UTV
18	2	616-1051-00	Hudraulic Caliper
19	2	616-1056-00	Brake Pad
20	4	616-1025-00	10 mm copper crush washer
21	2	616-1015-00	Banjo Bolt M 10mm x 1.0
22	2	716-3008-00	Brake Line Left Rear-Lg UTV
23	2	737-2034-00	Half-Shaft - Rear Large UTV Crew Cab&Long bed
24	2	765-1016-00	Rear Hub Castle Nut Cotter Pin
25	2	765-1012-00	Rear Hub Castle Nut
26	2	787-2010-00	Rear Shock-Lg. UTV-Gas & Diesel
27	4	618-5049-00	1/2-13 x 2 GR5 Hex Bolt Zinc
28	1	737-3005-00	Rear Differential, Large MTV
29	1	787-3211-00	Extended Right Rear Upper A-arm assy
30	1	787-3213-00	Extended Right Rear Lower A-Arm Assy
31	2	716-3006-00	Brake Line Right Rear-Lg UTV
32	1	716-3010-00	Brake Line Tee-Rear-Lg UTV
33	1	618-2069-00	3/8" - 16 X 2-1/2" Hex Hd Cap Screw
34	1	613-5041-00	3/8-16 Nylon Insert Locknut
35	1	726-3226-00	Left Rear Fender Well
36	8	630-7040-00	1/4 x 1 Hex Head Tek Screw
37	1	726-3228-00	Right Rear Fender Well
38	6	613-5202-00	3/8-16 Nylock Flange Nut
39	2	618-2023-00	3/8"-16 x 2-1/4" Carriage Bolt
40	2	725-3210-00	Caliper Brake Mount Spacer
41	2	725-3026-00	IRS Lower Spacer
42	2	722-4004-00	Wheel Center Cap-Lockout Wheel
43	2	725-3025-00	IRS Upper Spacer
44	1	739-3380-00	Rear Diff Cage Top Brace
45	4	618-2011-00	3/8 - 16 X 1" Carriage Bolt
46	1	739-3328-00	Right Rear Differential Mount
47	1	737-3006-00	Rear Diff Lock Solenoid
48	1	737-3007-00	Rear Diff Lock Solenoid Spring
49	2	722-4108-00	Dou- Trax 26X11R14 6 Ply Tire
50	2	722-4002-00	Wheel-Lockout-14X8-4 Back Sp.
51	2	722-4110-00	2500 Steel Wheels Centery Cap (Base Model Only)
52	2	722-4113-00	Black Rock Tire-27x11xR14 Rear (Base Model Only)
53	8	713-1012-00	Open End Lug Nut-Black (Base Model Only)
54	2	722-4007-00	4x4 Steel Rear Wheel-Black (Base Model Only)
55	2	712-3222-00	Half Shaft CV Boot Kit
56	1	716-3012-00	Brake Line W/Crimped Tee-Truck

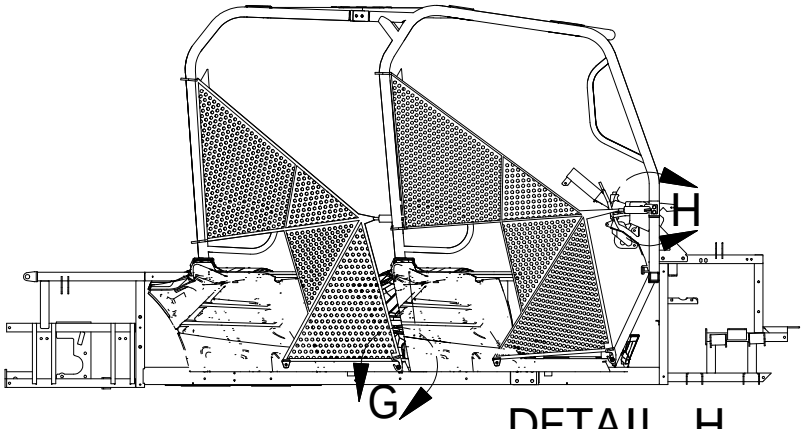

DETAIL G

DETAIL H

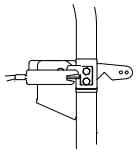

Parts List			
ITEM	QTY	PART NUMBER	DESCRIPTION
1	4	618-2008-00	3/8"-16X1-3/4" Gr 8 C/S
2	4	725-3208-00	.75ODx.4IDx.375"L Spacer
3	4	613-5201-00	3/8-16 Serrated Flange Nut
4	1	739-4420-00	Safety Net Bracket Left
5	1	739-4422-00	Safety Net Bracket Right
6	1	771-1004-00	Side Net - Left Side
7	1	771-1006-00	Side Net - Right Side
8	2	726-4502-00	Side Net Lower Clip Retainer_L
9	4	744-1006-00	Side Net Clip Lock Pin
10	4	618-2089-00	1/4-20 X3-1/2" SS Butt Hd Scr
11	8	613-8073-50	1/4-20 Nylon Insert Locknut BL
12	2	726-4503-00	Side Net Lower Clip Retainer_R
13	4	618-1055-50	1/4-20 X3" (GRS) Screw Black
14	1	739-4421-00	Safety Net Brkt Crew Cab Rear-Left
15	1	771-1007-00	Rear Side Net - Left Side Intimidator
16	1	771-1008-00	Rear Side Net - Right Side Intimidator
17	1	739-4423-00	Safety Net Brkt Crew Cab Rear-Right
18	2	613-5202-00	3/8-16 Nylock Flange Nut
19	2	618-2048-00	3/8" -16 x 2" G8 Carriage Bolt

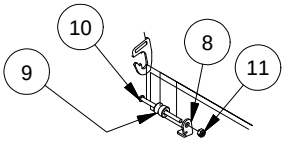

DETAIL D

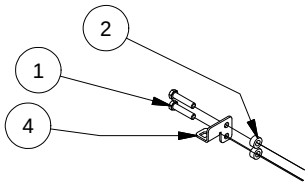

DETAIL F

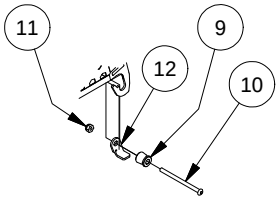

DETAIL B

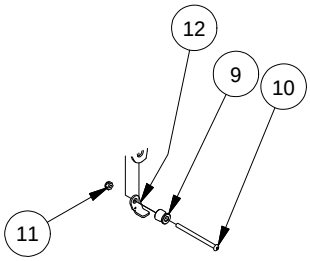

DETAIL A

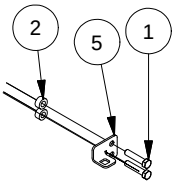

DETAIL C

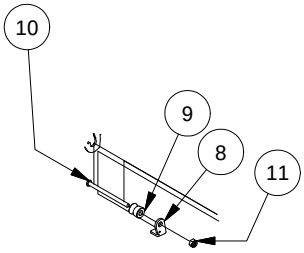

DETAIL E

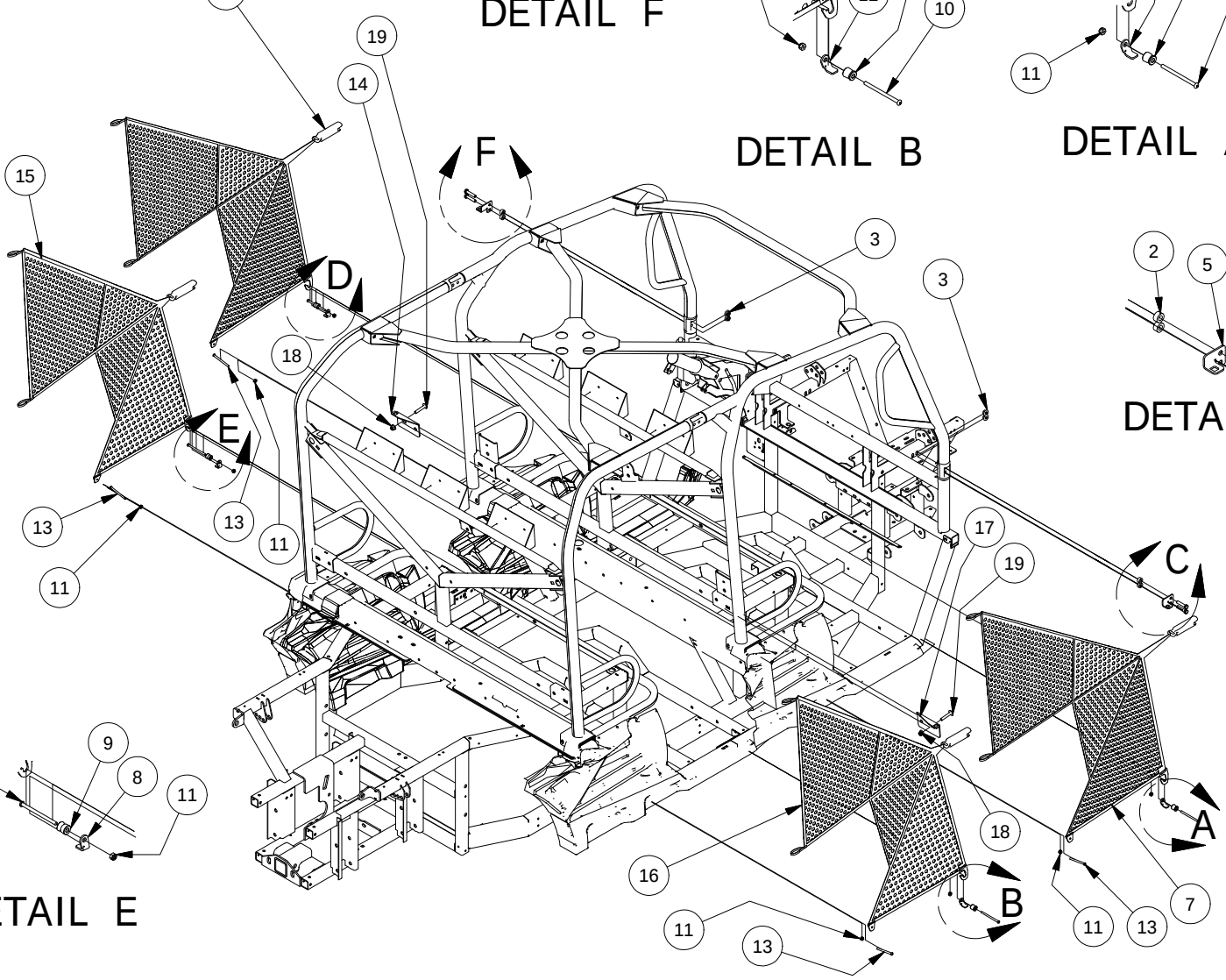

Crew Cab Roll Cage Assembly

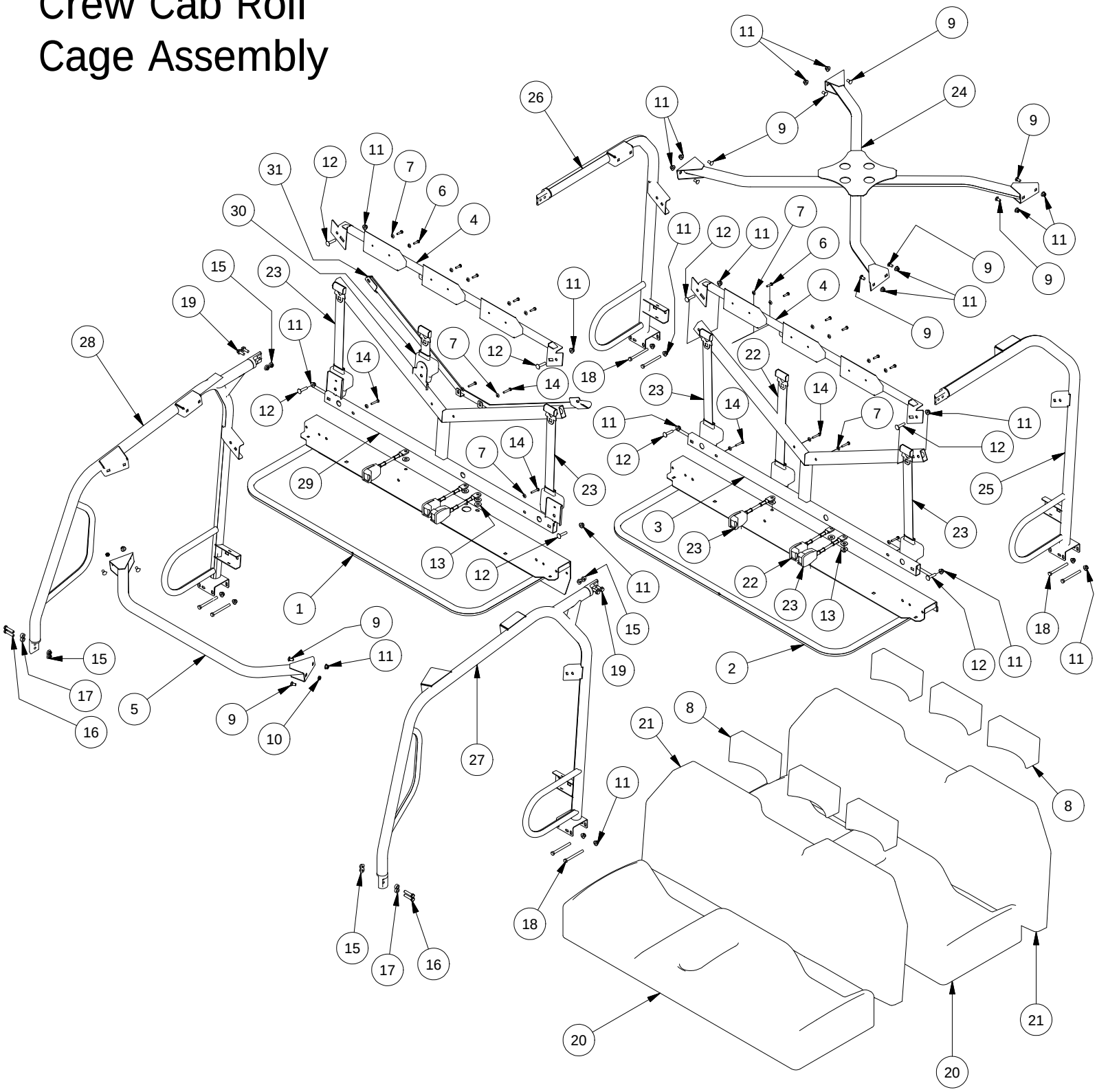

Parts List			
ITEM	QTY	PART NUMBER	DESCRIPTION
1	1	770-3306-00	Front Seat Frame Assembly Crew Cab
2	1	770-3004-00	Seat Frame Assy-Electric
3	2	780-3000-00	ROPS K Brace Assy
4	2	780-3006-00	ROPS Head Rest Mount Assy
5	1	703-3318-00	ROPS Front Cross Brace
6	12	618-4007-00	1/4-20 x 1 Grade 5 Hex bolts Zinc
7	20	619-4008-00	1/4 Lock Washer Zinc
8	6	771-2004-00	Head Reast-Larg UTV
9	12	618-2068-00	3/8 x 3/4" GR 8 Carr Bolts Zinc
10	2	613-2004-00	3/8"-16 Nyloc Jam Nut
11	26	613-5202-00	3/8-16 Nylock Flange Nut
12	8	618-2048-00	3/8" -16 x 1-3/4" G8 Carriage Bolt
13	8	619-8052-00	7/16 USS Flat Washer Zinc
14	8	618-5005-00	1/4-20 x 1-1/2 Grade 5 Hex bolts Zinc
15	8	613-5201-00	3/8-16 Serrated Flange Nut
16	4	618-2008-00	3/8"-16X1-3/4" Gr 8 C/S
17	4	725-3208-00	.75ODx.4IDx.375"L Spacer
18	8	618-1081-00	3/8" -16 x4 Gr.8 Hex bolt Cs
19	4	618-6055-50	3/8 - 16 X 1 Flange Bolt BLK Gr.8
20	2	771-2002-00	Seat Bottom-Large UTV
21	2	771-2000-00	Seat Back-Large UTV
22	1	771-1002-00	Seat Belt Assy-3 Point-Middle
23	1	771-1000-00	Seat Belt Assy-3 Point-Outside
24	1	780-3022-00	ROPS X-Brace Assembly Crew Cab
25	1	780-3014-00	ROPS Left Rear Hoop Assy Crew Cab
26	1	780-3016-00	ROPS Right Rear Hoop Assy Crew Cab
27	1	780-3018-00	ROPS Left Front Hoop Assy Crew Cab
28	1	780-3020-00	ROPS Right Front Hoop Assy Crew Cab
29	1	780-3001-00	ROPS K Brace Assy Crew Cab
30	1	771-1005-00	Front Center Seat Belt
31	1	770-3310-00	Crew Cab Rear Handhold Assy

Bed Assembly 1

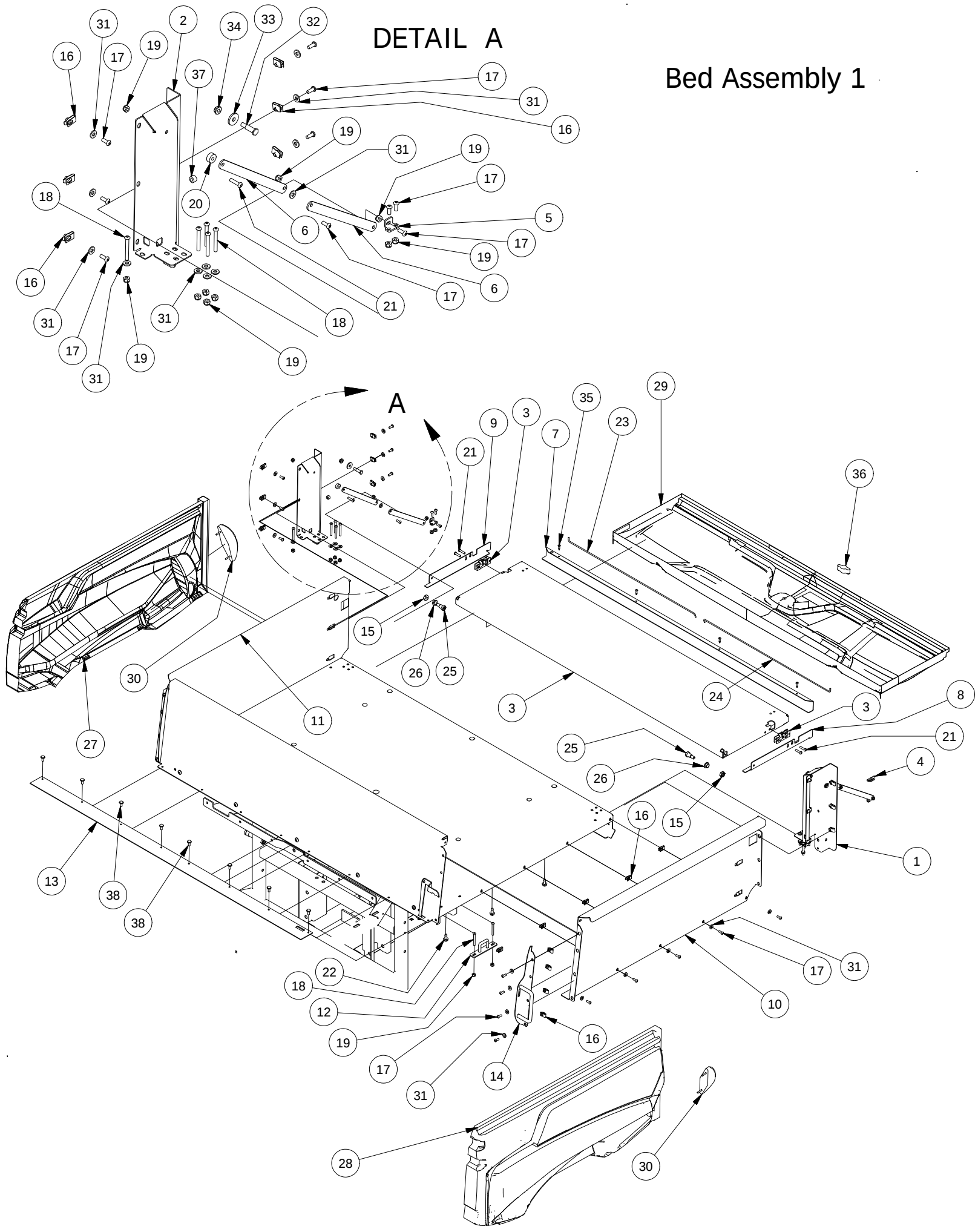

Bed Assembly 1			
ITEM	QTY	PART NUMBER	DESCRIPTION
1	1	703-4008-10	Bed Side Support-Left
2	1	703-4006-10	Bed Side Support-Right
3	1	760-1010-00	Standard bed Tail Gate Panel With Cross Brace Assembly
4	1	739-4002-00	Tailgate Support Bracket (Right)
5	1	739-4004-00	Tailgate Support Bracket (Left)
6	4	739-4016-00	Tailgate Support Arm-2500
7	1	703-4002-20	Top Tailgate Guard-Aluminum
8	1	703-4014-20	Left TG Side Cover-Aluminum
9	1	703-4012-20	Right TG Side Cover-Aluminum
10	1	703-4004-20	Standard Bed Left Side-Steel-Aluminum
11	1	726-4006-20	Standard Bed Right Side-Steel-Aluminum
12	2	739-7005-00	Door Striker Post - Assy 1500G
13	1	712-3020-00	Bed Dust Seal
14	1	769-4002-00	Dump Bed Handle Assy
15	6	613-0040-00	1/2-13 Nylon Insert Jam Locknut
16	34	613-0054-00	1/4-20 Cage Nut
17	43	618-8064-50	1/4-20 x 5/8 Button Socket C/S
18	14	618-1060-50	1/4-20 X2" Button Hd Black
19	25	613-8073-50	1/4-20 Nylon Insert Locknut BL
20	3	725-4004-00	Spacer, .261 IDx.740 ODx.315 L
21	7	618-2037-50	1/4-20 X1 Button Socket C/S Black
22	6	618-2021-00	5/16" - 18 3/4" Ind Hex Washr Hd - Type F
23	1	735-4000-00	Tailgate Latch Push Rod Left
24	1	735-4002-00	Tailgate Latch Push Rod Right
25	2	618-6062-00	1/2" x 5/8" Soc. Shoulder Bolt
26	2	632-5000-00	1/2 IDx 5/8 x 5/16 OIB Bushing
27	1	780-2065-10	Dump Bed Side-Right-Large UTV
28	1	780-2070-10	Dump Bed Side-Left-Large UTV
29	1	780-2075-10	Tailgate-Large UTV-Black
30	2	786-0014-00	Stop/Tail Light - Large UTV
31	47	619-0010-50	1/4 Flat Washer Black
32	2	739-7000-00	Basket Latch Striker Post
33	2	619-4010-00	1" ODx.307" IDx120 Flat Washer
34	2	613-0031-00	Serrated Flange nut
35	4	630-2030-50	10 x 3/4 Pan Philips Tek Screw
36	1	752-1006-00	Dump Bed Tail gate Actuator
37	2	729-1002-00	Buttom Bumper-Tailgate-2500
38	8	618-2082-00	Push Pin Rivet-Bed Seal

Bed Assembly 2

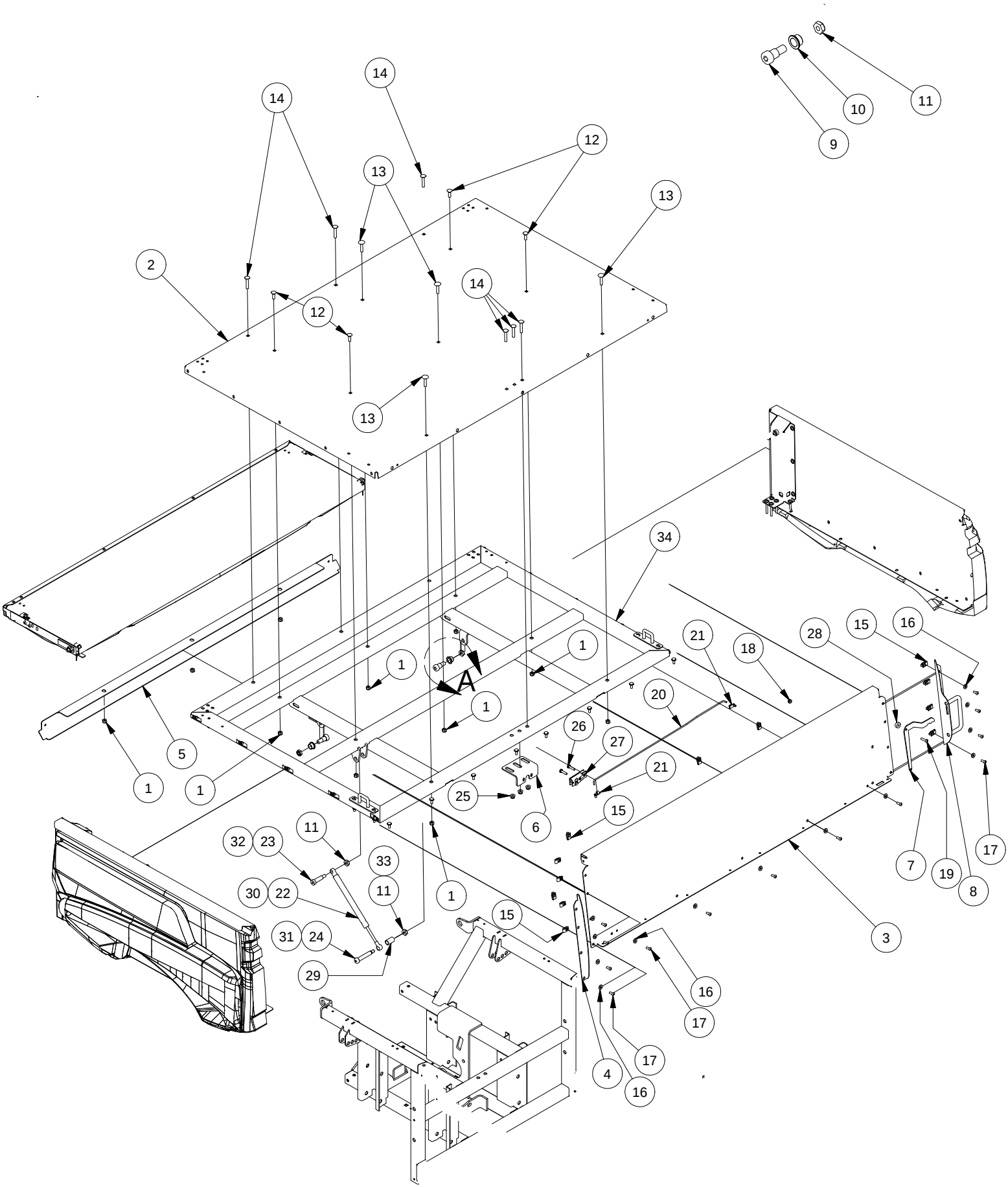

Bed Assembly 2			
ITEM	QTY	PART NUMBER	DESCRIPTION
1	11	613-8047-00	5/16-18 Nylock HEX Nut
2	1	726-4000-20	Srandard Bed Bottom Aluminum
3	1	726-4002-20	Srandard Bed Front-Aluminum
4	1	703-4009-20	Right Bed Corner Cover-Aluminum
5	1	703-4004-20	Lower Bed Cover-Aluminum
6	1	739-3406-00	Rotary Latch Bracket-Bed
7	1	769-4000-00	Dump Bed Actuator Lever
8	1	769-4002-00	Dump Bed Handle Assy
9	2	618-3001-00	5/8 x 5/8 Shoulder Bolt
10	2	632-5052-00	Bronze Bushing - SF- 2024-8
11	6	613-0040-00	1/2-13 Nylon Insert Jam Locknut
12	4	618-8065-00	5/16-18 x 1 Carriage Bolt
13	4	618-8060-00	5/16-16 x 1 1/2 Carriage Bolts
14	6	618-4708-00	5/16-18 x 1-3/4 Carriage bolt
15	34	613-0054-00	1/4-20 Cage Nut
16	47	619-0010-50	1/4 Flat Washer Black
17	43	618-8064-50	1/4-20 x 5/8 Button Socket C/S
18	25	613-8073-50	1/4-20 Nylon Insert Locknut BL
19	7	618-2037-50	1/4-20 X1 Button Socket C/S Black
20	1	735-4004-00	Dump Bed Latch Push Rod
21	2	772-7000-00	Latch Push Rod Retainer Clip
22	1	735-2000-00	Dump Bed Gas Spring-Large UTV
23	1	618-2020-00	12"X1-1/2" Shoulder Bolt
24	1	618-2047-00	1/2"x 2-1/2" Shoulder Bolt
25	3	613-8049-00	5/16-18 Nylon Insert Flange Nut Zinc Orange Nylon
26	2	618-4007-00	1/4-20 x 1 Grade 5 Hex bolts Zinc
27	1	752-1004-00	Dump Bed Rotary Latch
28	3	725-4004-00	Spacer, .261 IDx.740 ODx.315 L
29	1	725-1009-00	Pedal Spring Spacer LRG UTV 1-1/8 spacer
30	1	735-2010-00	Dump Bed Actuator-2500 Series (XD4 Models Only)
31	1	618-6068-00	1/2" X 4" Shoulder Bolt (XD4 Models Only)
32	1	618-5049-00	1/2-13 X 2 GR 5 Hex Bolts Zinc (XD4 Models Only)
33	1	613-5202-00	3/8-16 Nylock Flange Nut (XD4 Models Only)
34	1	770-3016-00	Standard Bed Frame Assy

Tailgate Intimidator
791-2026-00-Orange
791-2026-10-Gray
791-2026-20-O.D. Green

791-2030-00
Decal Warning Cluster-2500

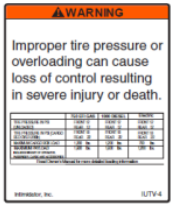

791-2036-00
Decal Warning Cluster
Crew-Series

Dash Intimidator
791-2020-00 –Orange
791-2020-10-Gray
7912020-20-O.D.Green

4X4 Right
791-2023-00-Orange
791-2023-10-Gray
791-2023-20-O.D. Green

4X4 Left
791-2022-00-Orange
791-2022-10-Gray
791-2022-20-O.D. Green

XD4 Left
791-2024-00-Orange
791-2024-10-Gray
791-2024-20-O.D. Green

XD4 Right
791-2025-00-Orange
791-2025-10-Gray
791-2025-20-O.D. Green

750cc Left
791-2010-00-Orange
791-2010-10-Gray
791-2010-20-O.D. Green

750cc Right
791-2011-00-Orange
791-2011-10-Gray
791-2011-20-O.D. Green

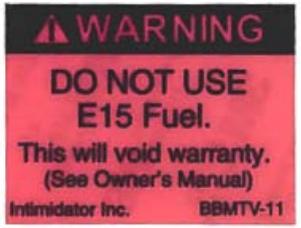

E15 Fuel Warning Label
791-1025-00

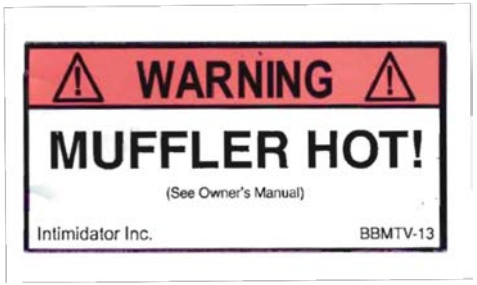

Muffler Hot Warning Label
791-1000-00