Intimidator UTV Part Manual

" Kohler Gas 750 EFI"

www.IntimidatorUTV.com

Table of Contents

Front Suspension Assembly 3

Parts List 4

Lights and Break Assemblies 5

Parts List 6

Seat, Dash, and Grill Assemblies 7

Parts List 8

Plastic Assembly 9

Parts List 10

Kohler Engine Assembly.....11

Parts List.....12

Rear Suspension Assembly 13

Parts List 14

Rops Assembly 15

Safety Net Assemblies 16

Bed Assembly (1 of 2) 17

Parts List 18

Bed Assembly (2 of 2).....19

Parts List 20

Versabed (Optional).....21

Parts List.....22

Decals.....22-24

Front Suspension Assembly

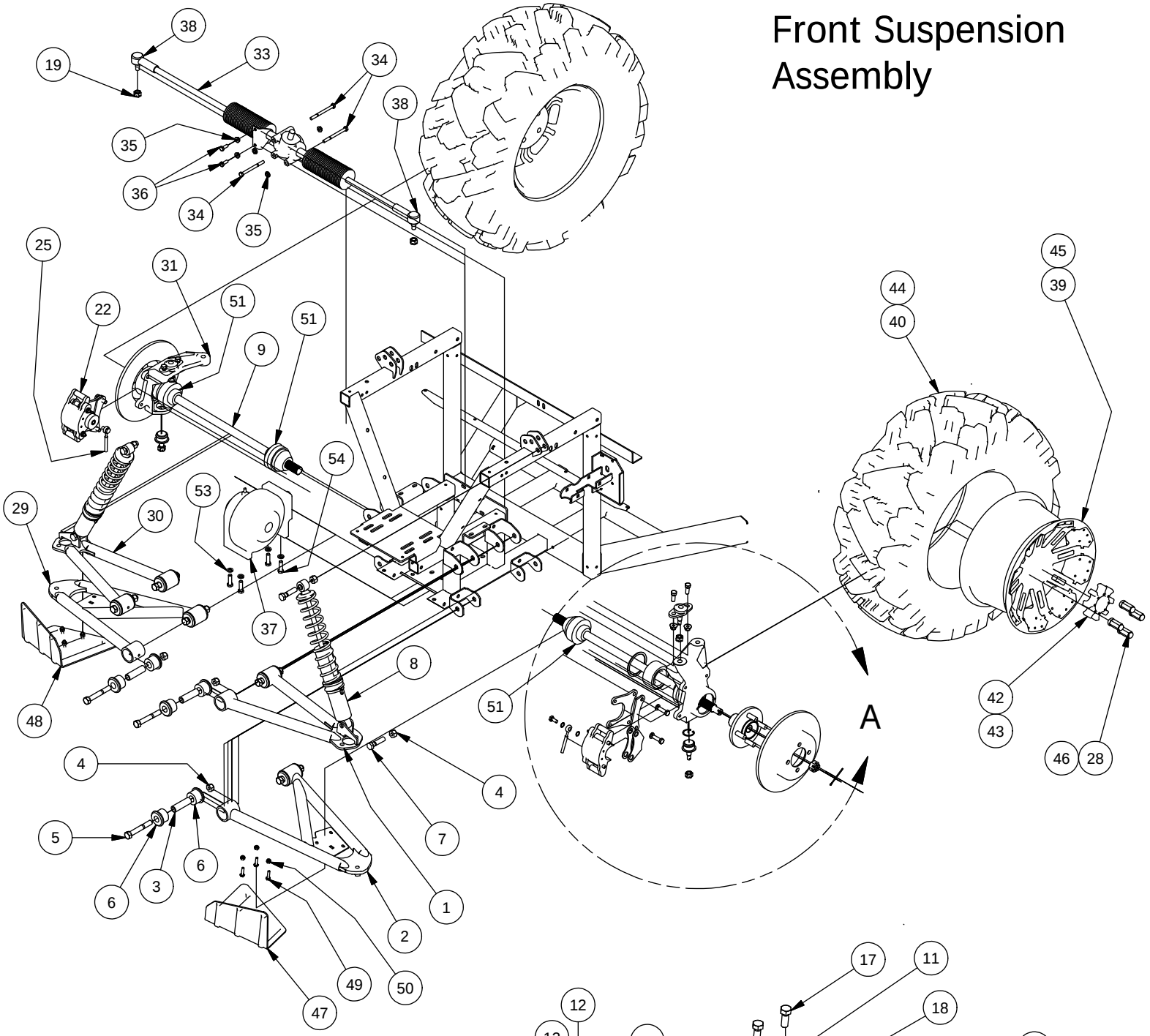

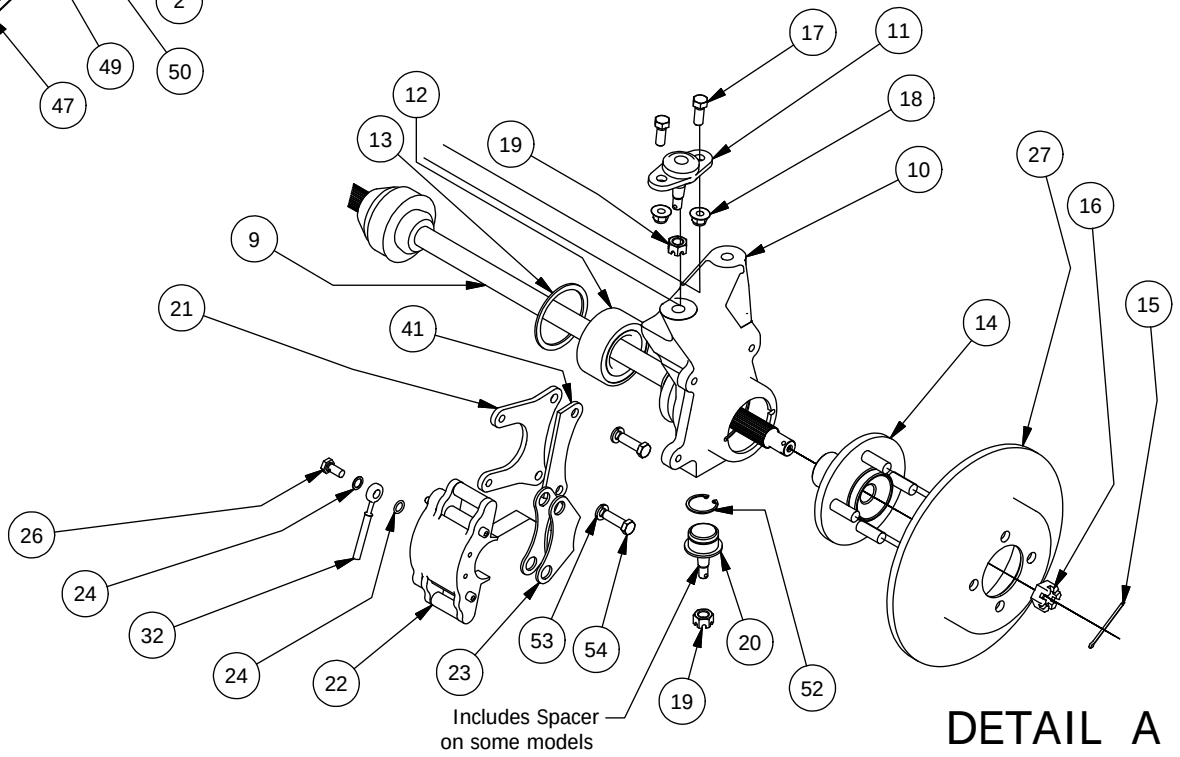

DETAIL A

Front Suspension Assembly			
ITEM	QTY	PART NUMBER	DESCRIPTION
1	1	787-3201-00	Left Front Upper A-arm Assy
2	1	787-3203-00	Left Front Lower A-Arm Assy
3	8	732-2001-00	Large MTV A-Arm Bushing Sleeve
4	12	613-6037-00	1/2-13 Nylon Insert Locknut
5	8	618-2006-00	1/2" - 13X3-1/2" Hex Bolt Gr 5
6	16	732-2000-00	Large MTV A-Arm Bushing
7	4	618-5049-00	1/2-13 x 2 GR5 Hex Bolt Zinc
8	2	787-2005-00	Front Shock-Kohler 25 Lg UTV
9	2	737-2029-00	Half-Shaft - Front Large UTV
10	1	737-2020-00	Spindle, Left Front-Large UTV
11	2	799-2003-00	Ball Joint-Spindle-Upper High Strength
12	2	710-2002-00	Spindle Bearing LRG UTV
13	2	710-2003-00	Retaining Ring-Spindle Bearing
14	2	786-2000-00	Hub-Large UTV
15	2	765-1016-00	Rear Hub Castle Nut Cotter Pin
16	2	765-1012-00	Rear Hub Castle Nut
17	4	618-6049-00	3/8-16 X 1 GR 5 Hex Bolts Zinc
18	4	613-5202-00	3/8-16 Nylock Flange Nut
19	6	613-2003-00	M12 X 1.25 Castle Nut
20	2	799-2000-00	Ball Joint-Spindle-Lower
21	2	639-0054-60	Brake Caliper Brkt-Ausco-Elect
22	2	616-1051-00	Hydraulic Caliper
23	2	616-1056-00	Brake Pad Kit (2 Pads per Kit)
24	4	616-1025-00	10 mm copper crush washer
25	1	716-3002-00	Brake Line Front Right-Lg UTV
26	2	616-1015-00	Banjo Bolt M 10mm x 1.0
27	2	716-2000-00	Rotor - Large UTV
28	8	613-0001-00	1/2 Lug Nut-44011- Front
29	1	787-3202-00	Right Front Lower A-Arm Assy
30	1	787-3200-00	Right Front Upper A-Arm Assy
31	1	737-2022-00	Spindle, Right Front-Large UTV
32	1	716-3000-00	Brake Line Front Left-Lg UTV
33	1	731-3000-00	Rack & Pinion, Large MTV
34	3	618-2060-00	5/16-18 X 3 1/2 GR 5 Hex Bolts Zinc
35	5	613-9002-00	5/16-18 Hex Flange Nuts Zinc w/Serations
36	2	618-8063-00	5/16-18 x 3/4 GR 5 Hex bolt Zinc
37	1	756-3000-00	Front Differential-Larg UTV
38	2	710-1014-00	Tie Rod End-Intimidator
39	2	722-4000-00	XD4 Front Wheel
40	2	722-4102-00	XD4 Front Tire
41	2	725-3210-60	Caliper Brake Mount Spacer
42	2	722-4004-00	XD4 Wheel Center Cap
43	2	722-4110-00	Base Wheel Center Cap
44	2	722-4112-00	Base Model Front Tire
45	2	722-4006-00	Base Model Front Wheel
46	8	713-1012-50	Open End Lug Nut-Black (Base Model Only)
47	1	780-2206-00	Left A Frame Guard-2500
48	1	780-2207-00	Right A Frame Guard-2500
49	6	618-4007-00	1/4-20 x 1 Grade 5 Hex bolts Zinc
50	6	613-8073-00	1/4-20 Nylon Insert Locknut Zinc Orange Nylon
51	4	712-3222-00	Half Shaft CV Boot Kit
52	2	799-2001-00	Retaining Ring-Lg MTV Ball Jt
53	8	619-5037-00	3/8 Lockwasher Zinc
54	8	618-5040-00	3/8-16 x 1-1/4 Hex Bolt GR5

Lights and Brake Assemblies

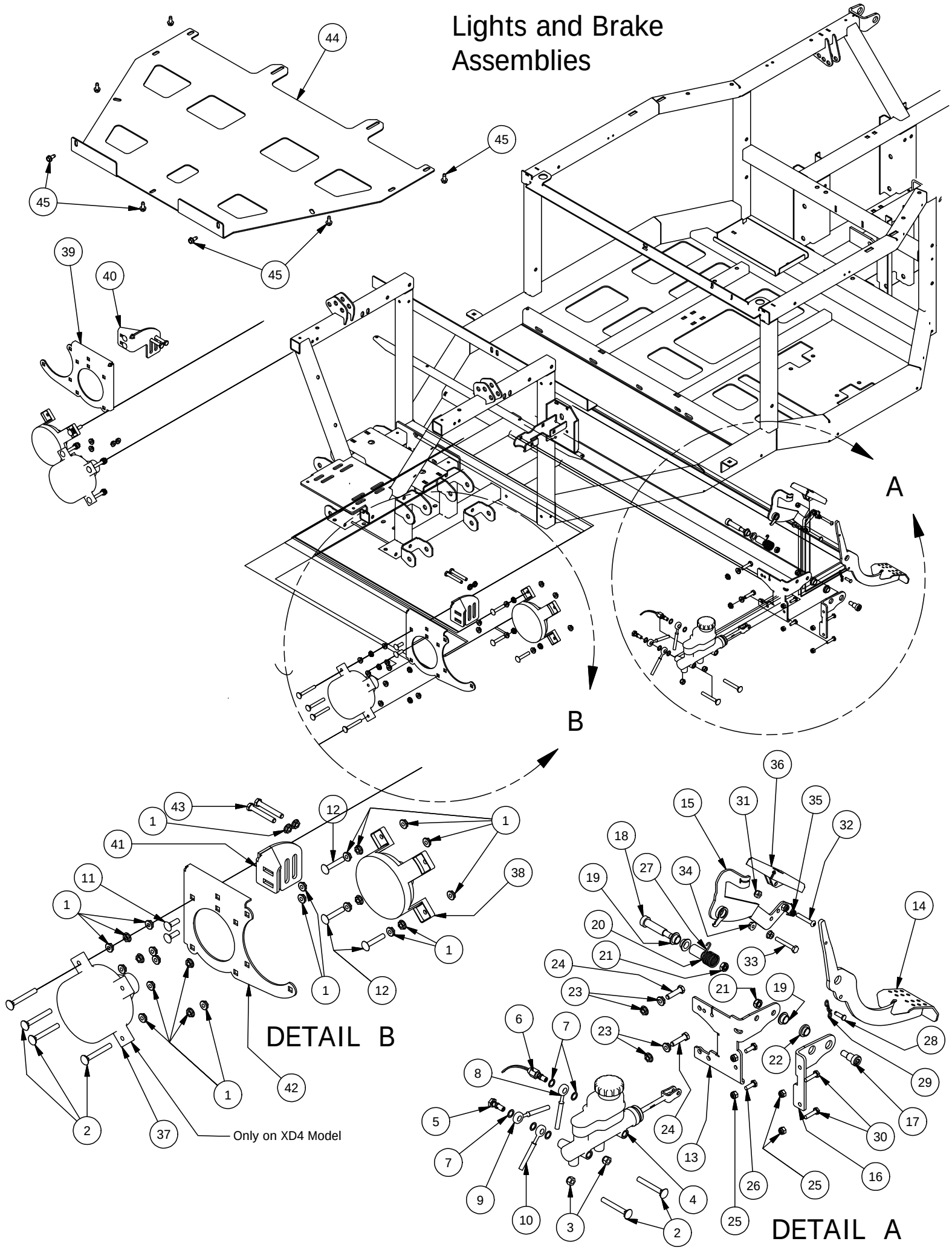

Lights and Brake Assemblies			
ITEM	QTY	PART NUMBER	DESCRIPTION
1	51	613-9002-00	5/16-18 Hex Flange Nuts Zinc w/Serations
2	10	618-2019-00	5/16" - 18 X 2-1/2" Carriage Bolt
3	2	613-8047-00	5/16-18 Nylock HEX Nut
4	1	716-1000-00	Master Cylinder, Dual Cylinder
5	1	716-1017-00	Banjo Bolt-Double-10mm-1.0
6	1	777-1011-00	Brake Switch-Banjo-2012
7	5	616-1025-00	10 mm copper crush washer
8	1	716-3004-00	Brake Line-MC to Rear T-Lg UTV
9	1	716-3002-00	Brake Line Front Right-Lg UTV
10	1	716-3000-00	Brake Line Front Left-Lg UTV
11	4	618-8065-00	5/16-18 x 1 Carriage Bolt
12	6	618-4708-00	5/16-18 x 1-3/4 Carriage bolt
13	1	739-4202-00	Brake Pedal Bracket-Right-2500
14	1	716-2012-00	Brake Pedal Assy-Large UTV
15	1	755-1003-00	Accel Pedal Lever Assy
16	1	739-4200-00	Brake Pedal Bracket Left-2500
17	1	618-6062-00	1/2" x 5/8" Soc. Shoulder Bolt
18	1	618-6064-00	12"X1-3/4" Shoulder Bolt
19	3	632-5000-00	1/2 IDx 5/8 x 5/16 OIB Bushing
20	1	725-1009-00	Pedal Spring Spacer LRG UTV 1-1/8 spacer
21	2	613-2004-00	3/8"-16 Nyloc Jam Nut
22	1	732-2003-00	Bushing, Oil Impregnated
23	4	613-9002-00	5/16-18 Hex Flange Nuts Zinc w/Serations
24	2	618-2029-00	5/16" x 1-1/4" Hex C/S Gr 5
25	4	613-8073-00	1/4-20 Nylon Insert Locknut Zinc Orange Nylon
26	2	618-8052-00	1/4-20 x 3/4 Grade 5 Hex bolts Zinc
27	1	734-2002-00	Spring-Accelerator Pedal
28	1	620-1000-00	Clevis Pin, 1/4" x 3/4"
29	1	620-1002-00	Bow Tie Clip
30	2	618-4007-00	1/4-20 x 1 Grade 5 Hex bolts Zinc
31	2	613-8073-50	1/4-20 Nylon Insert Locknut BL
32	1	618-2038-50	1/4-20 X1-1/2" BH Socket Scr Blk
33	1	618-2016-50	1/4-20 x 1-3/4" Hex Bolt
34	2	613-9001-00	1/4-20 Hex Flange Nuts Zinc W/Serrations
35	1	734-2003-00	Spring- Accelerator Pedal Assy
36	1	755-1004-00	Accelerator Pedal Assy-LG UTV
37	2	786-0015-00	Headlight-Low Beam-Large UTV
38	2	786-0016-00	Headlight-High Beam-Large UTV
39	1	739-4054-00	Head Light Bracket-Right
40	1	739-4058-00	Head Light Bracket Brace-Right
41	1	739-4056-00	Head Light Bracket Brace-Left
42	1	739-4052-00	Head Light Bracket-Left
43	4	618-2041-00	5/16" x 2-1/4" Hex Hd Cap Scr.
44	1	726-4012-00	Skid Plate-Gas 2500
45	7	618-2021-00	5/16" - 18 3/4" Ind Hex Washr Hd - Type F

Seat, Dash, and Grill Assemblies

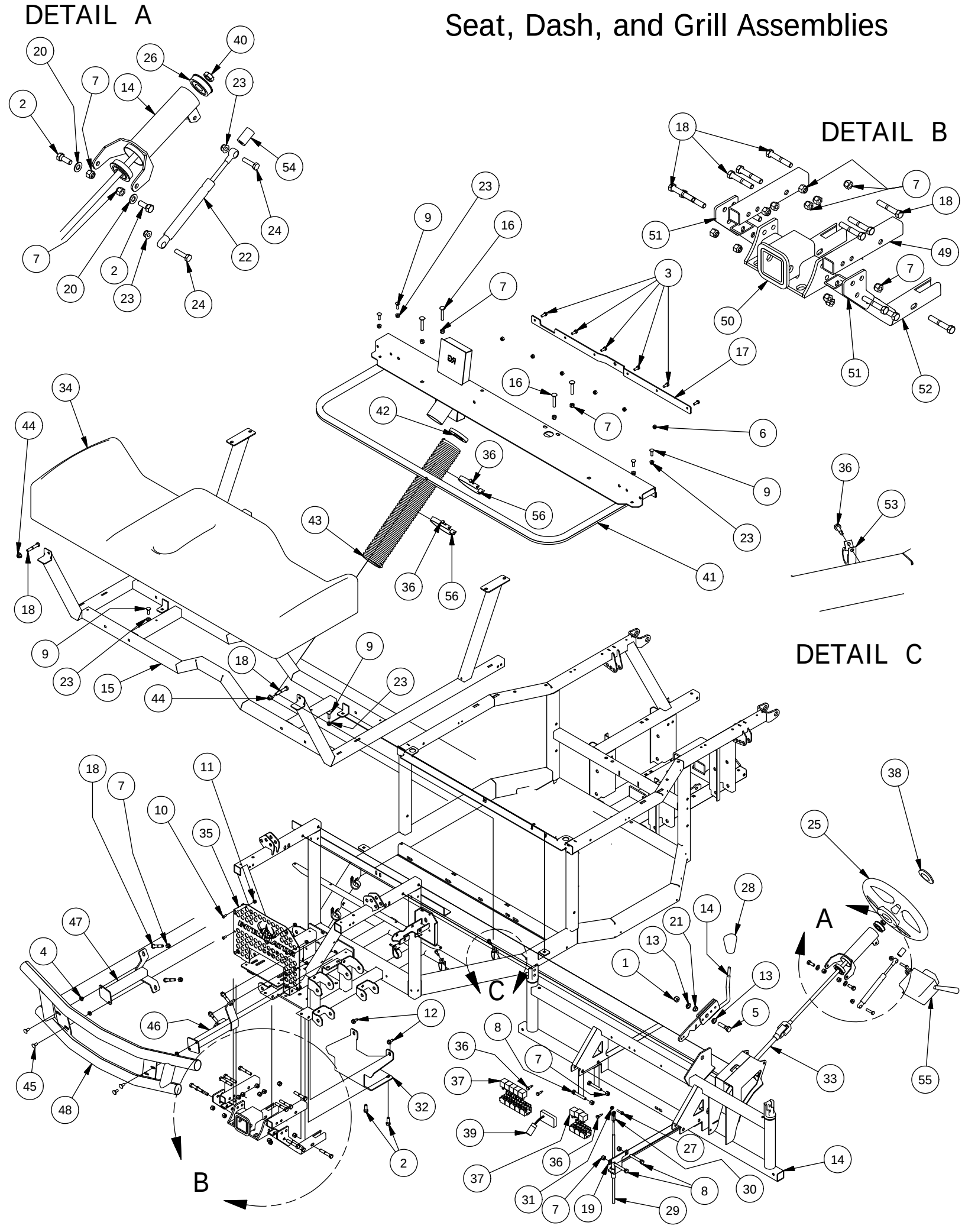

Seat, Dash, and Grill Assemblies			
ITEM	QTY	PART NUMBER	DESCRIPTION
1	1	613-6037-00	1/2-13 Nylon Insert Locknut
2	4	618-6049-00	3/8-16 X 1 GR 5 Hex Bolts Zinc
3	6	618-8063-00	5/16-18 x 3/4 GR 5 Hex bolt Zinc
4	8	613-9002-00	5/16-18 Hex Flange Nuts Zinc w/Serations
5	1	618-5049-00	1/2-13 x 2 GR5 Hex Bolt Zinc
6	6	613-8047-00	5/16-18 Nylock HEX Nut
7	26	613-5041-00	3/8-16 Nylon Insert Locknut
8	4	618-2069-00	3/8" - 16 X 2-1/2" Hex Hd Cap Screw
9	6	618-8065-00	5/16-18 x 1 Carriage Bolt
10	12	618-8064-50	1/4-20 x 5/8 Button Socket C/S
11	12	613-8073-50	1/4-20 Nylon Insert Locknut BL
12	2	618-2021-00	5/16" - 18 3/4" Ind Hex Washr Hd - Type F
13	2	732-2003-00	Bushing, Oil Impregnated
14	1	770-3002-00	Dash Support Assy
15	1	770-3000-00	Floor Board Support Assy
16	4	618-2023-00	3/8"-16 x 2-1/4" Carriage Bolt
17	1	739-3408-00	Rotary Latch Bracket-Frame
18	18	618-2022-00	3/8" - 16 X 2-1/4" Hex Bolt
19	1	739-3364-60	Upper Shift Cable Bracket
20	2	619-0012-00	3/8 ID x 1/8 Plastic Washer
21	1	632-5000-00	1/2 IDx 5/8 x 5/16 OIB Bushing
22	1	735-2005-00	Tilt Steering Gas Spring
23	8	613-8049-00	5/16-18 Nylon Insert Flange Nut Zinc Orange Nylon
24	2	618-1077-00	5/16 x 1-1/4 G8 Zn Hex Bolt
25	1	722-2500-00	Steering Wheel Large UTV
26	2	720-4060-00	Steering Column Bearing
27	1	618-4007-00	1/4-20 x 1 Grade 5 Hex bolts Zinc
28	1	745-2000-00	Shift Lever Knob-Large UTV
29	1	764-2004-00	Gear Shift Cable-Large UTV
30	1	799-1002-00	1/4-28, Right Hand Thread Heim
31	1	613-8073-00	1/4-20 Nylon Insert Locknut Zinc Orange Nylon
32	1	726-3210-00	Brush Guard Skid Plate
33	1	737-5002-00	Steering Shaft Assembly-Large UTV
34	1	771-2002-00	Seat Bottom-Large UTV
35	1	726-4065-00	Front Grill insert 2015
36	10	630-7040-00	1/4 x 1 Hex Head Tek Screw
37	8	786-0005-00	12 Volt Cube Relay
38	1	722-2502-00	Steering Wheel Cap-Hurricane
39	1	786-2002-00	PMW Controller, Team Rear Diff
40	1	737-5003-00	Steering Shaft Wheel Nut
41	1	770-3007-00	Seat Frame Assy Kohler 750 2014
42	2	772-2016-00	1-15/16 to 2 - 1/2 Hose Clamp
43	1	751-1010-00	4.5 ft. Flex Hose
44	2	613-5202-00	3/8-16 Nylock Flange Nut
45	8	618-8062-00	5/16-18x3/4 Carriage Bolts Zinc
46	1	739-3221-00	Brush Guard Mtg Brkt-Left
47	1	739-3220-00	Brush Guard Mtg Brkt-Right
48	1	770-3325-00	Intimidator Bumper 2015
49	2	703-4400-60	Front Receiver Tube Mtg Tube
50	1	793-3210-00	Front Receiver Assembly
51	2	739-4401-60	Front Receiver Gusset Intimidator
52	2	703-4401-60	Front Receiver Bottom Tube Intimidator
53	5	672-9000-00	1/2 EPDM Cushion Clamp
54	1	725-2000-00	3/4" OD x 27/64" ID x 1" Long Nylon Spacer Blk
55	1	686-0041-00	Turn Signal Pod
56	2	772-1050-00	3 - 1/2 EPDM Loop Clamp

Plastics Assembly

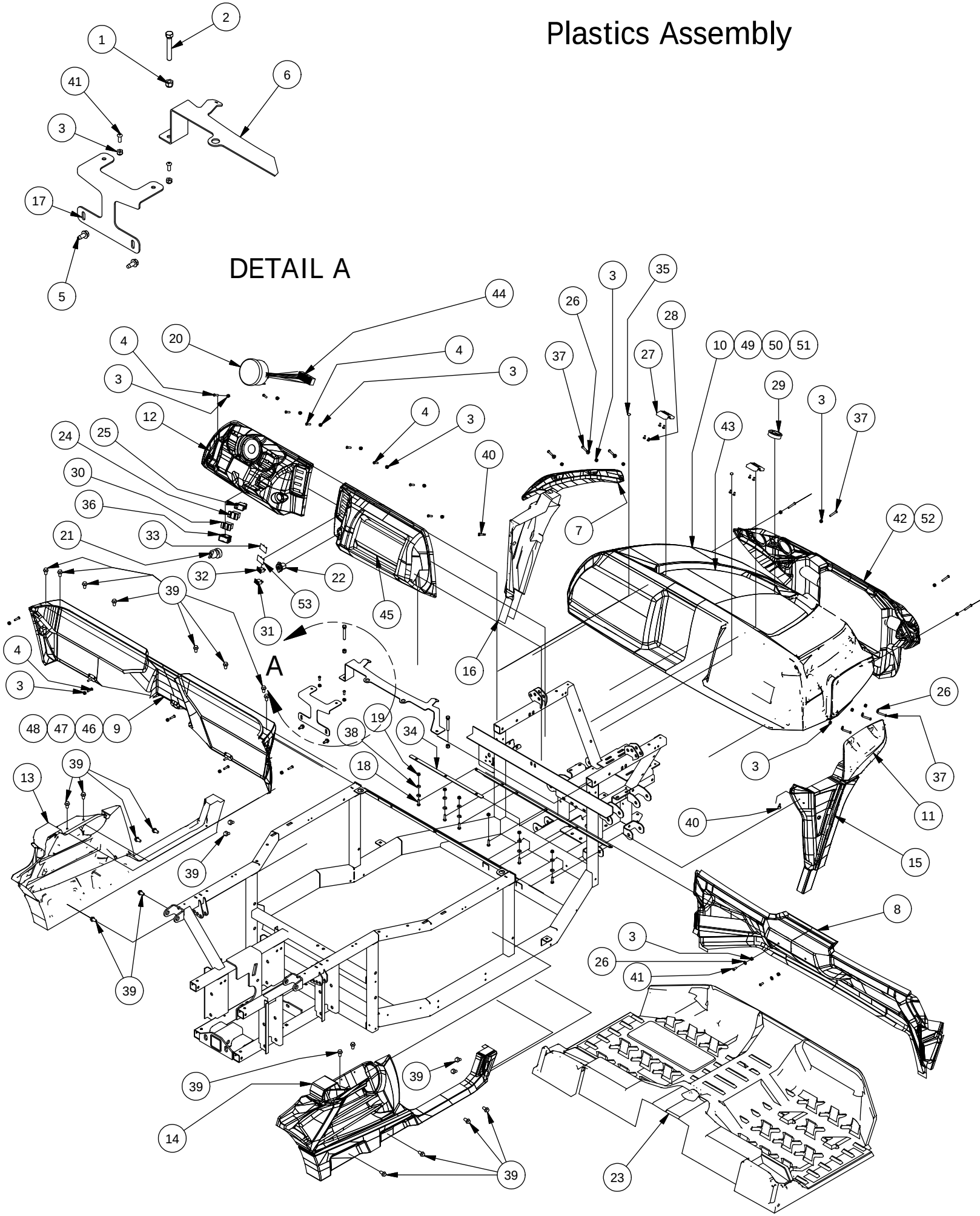

Plastics Assembly			
ITEM	QTY	PART NUMBER	DESCRIPTION
1	2	613-5041-00	3/8-16 Nylon Insert Locknut
2	2	618-2069-00	3/8" - 16 X 2-1/2" Hex Hd Cap Screw
3	27	613-8073-50	1/4-20 Nylon Insert Locknut BL
4	13	618-2037-50	1/4-20 X1 Button Socket C/S Black
5	2	618-2021-00	5/16" - 18 3/4" Ind Hex Washr Hd - Type F
6	1	739-3374-00	Upper Radiator Mounting Brkt
7	1	780-2011-10	Upper Front Fender Flare-Left
8	1	780-2010-10	Front Firewall-Large UTV-Black
9	1	780-2020-00	Center Seat Panel-Large UTV-Or
10	1	759-2000-00	Hood Large UTV-Orange
11	1	780-2012-10	Upper Front Fender Flare-Right
12	1	780-2039-00	Dash-Large UTV
13	1	780-2030-10	Seat Panel Left-Large UTV-Blk
14	1	780-2025-10	Seat Panel Right-Large UTV-Blk
15	1	780-2050-10	Lower Front Fender Flare-Right
16	1	780-2055-10	Lower Front Fender Flare-Left
17	1	739-2056-00	Upper Hood Support Brkt-Kohler/Electirc
18	6	618-4007-00	1/4-20 x 1 Grade 5 Hex bolts Zinc
19	6	613-9001-00	1/4-20 Hex Flange Nuts Zinc W/Serrations
20	1	786-2020-00	Speedometer/Display Gauge
21	1	777-1000-00	Ignition Switch
22	1	677-2075-00	12 Volt Auxilliary Plug
23	1	780-2015-10	Floor Board-Large UTV-Black
24	1	786-2034-00	Head Light Hi/off/Low Beam Sw.
25	1	786-2038-00	4WD Switch
26	8	619-0010-50	1/4 Flat Washer Black
27	2	653-5010-00	Hood Hinge
28	8	630-2050-00	M5-.8 x 10 Pan Phil M/S Zinc
29	1	652-5000-00	Hood Latch
30	1	786-2030-00	Differential Lock Switch
31	1	788-1006-00	Engine Fault Indicator Light
32	1	788-1008-00	Filter Plugging Ind. Light
33	2	786-2040-00	Panel Plug-Eaton Blank Switch
34	1	726-3242-60	Firewall Mount Brkt
35	2	658-6000-00	Self Adheasive Bumper
36	1	786-2036-00	Dump Bed Up/Down Switch
37	10	618-2038-50	1/4-20 X1-1/2" BH Socket Scr Blk
38	10	619-0023-00	5/16 flat Washer 18-8 SS
39	24	618-6065-00	AUEVCO P/N 17216 HOLE PLUG BLACK
40	2	630-7040-00	1/4 x 1 Hex Head Tek Screw
41	4	618-8064-50	1/4-20 x 5/8 Button Socket C/S
42	1	780-2060-10	Front Grill-Large UTV-Black
43	1	780-2005-00	Hood Lid-large UTV
44	1	786-2010-00	Wiring Harness_LG UTV-Gas
45	1	780-2040-00	Glovebox
46	1	780-2020-20	Center Seat Panel-Large UTV-Gr
47	1	780-2020-30	Center Seat Panel-2500-Camo
48	1	780-2020-40	Center Seat Panel-2500-Charo
49	1	759-2000-20	Hood Large UTV-Gr
50	1	759-2000-30	Hood Large UTV- Camo
51	1	759-2000-40	Hood Large UTV-Blk
52	1	780-2061-10	Front Grill-UTV (Base Model Only)
53	1	786-2044-00	Dash Light Blank Panel

Kohler Engine Assembly

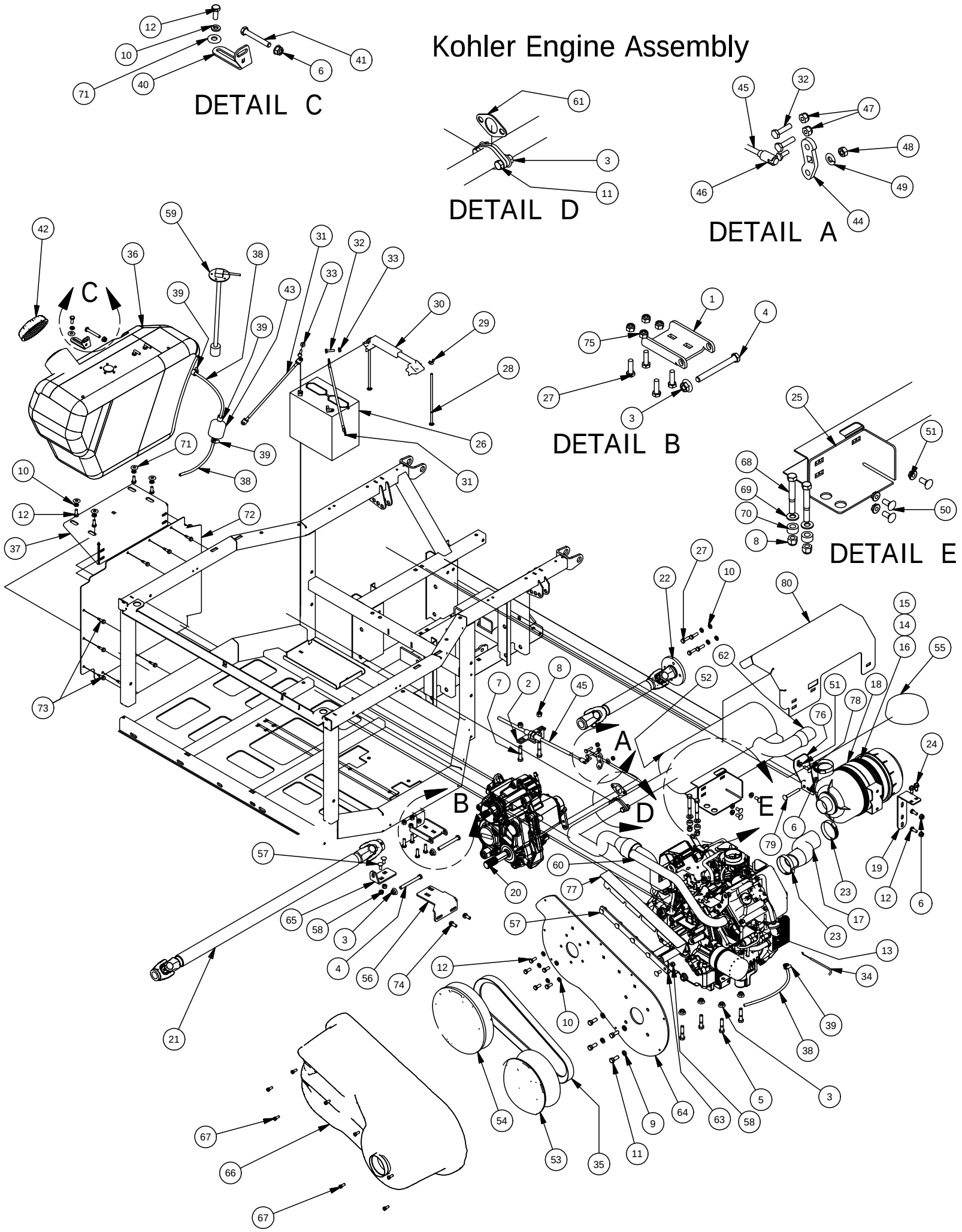

Kohler Engine Assembly			
ITEM	QTY	PART NUMBER	DESCRIPTION
1	1	739-3368-00	Lower Transmission Mounting Brkt
2	1	739-3366-60	Lower Shift Cable Bracket
3	8	613-5201-00	3/8-16 Serrated Flange Nut
4	2	618-2025-00	3/8" -16 X 3-1/2" hex C/S-Gr5
5	4	618-6050-00	3/8-16 x 1-3/4 Hex Bolt Zinc
6	4	613-8049-00	5/16-18 Nylon Insert Flange Nut Zinc Orange Nylon
7	2	618-2024-00	3/8 -16 X 2" Hex Bolt
8	4	613-5041-00	3/8-16 Nylon Insert Locknut
9	4	619-0013-00	3/8" Zn Lock Washer
10	14	619-8051-00	5/16 Lockwasher Zinc
11	6	618-6049-00	3/8-16 X 1 GR 5 Hex Bolts Zinc
12	12	618-8063-00	5/16-18 x 3/4 GR 5 Hex bolt Zinc
13	1	715-3004-00	Kohler 750 EFI Engine Package
14	1	763-1001-00	Air Filter
15	1	763-1002-00	Air Box Cap
16	1	763-1000-00	Air Box Assembly
17	1	736-2004-00	Intake Adapter Hose-750 EFI Kohler
18	1	772-1100-00	Air Canister Clamp
19	1	739-3370-00	Air Filter Bracket
20	1	737-3000-00	Transmission
21	1	737-2023-00	Front Drive Shaft-Lg UTV 750 EFI
22	1	737-2024-00	Rear Drive Shaft-Gas Lg UTV's Kohler & Weber
23	2	672-9052-00	1-15/16 to 2 - 1/2 Hose Clamp
24	6	618-2021-00	5/16" - 18 3/4" Ind Hex Washr Hd - Type F
25	1	739-2064-00	Muffler Mount Bracket
26	1	768-1003-00	AGM Starter Battery
27	8	618-1080-00	5/16-18 x 1" GR 8 Hex bolt
28	2	618-1084-00	1/4-20 x 8 Carriage Bolt Zinc
29	2	613-2005-00	1/4-20 Wing Nut Zinc
30	1	643-8929-00	Battery Hold Down
31	2	664-0025-00	39" Battery Cable 2 Gauge
32	4	618-4007-00	1/4-20 x 1 Grade 5 Hex bolts Zinc
33	2	613-9001-00	1/4-20 Hex Flange Nuts Zinc W/Serrations
34	1	764-2000-00	Throttle Cable-750-EFI Kohler
35	1	741-1004-00	CVT Belt-Kohler 750 EFI
36	1	767-1998-00	Gas Tank-Kohler 750 EFI
37	1	739-2058-00	Lower Fuel Tank Support Brkt
38	3	751-1014-00	6.5 ft. 1/4 Fuel Line - Low Perm
39	2	672-8067-00	Hose Clamp No. 4 - 7/32 - 5/8
40	1	739-2059-60	Upper Fuel Tank Support Brkt
41	1	618-2041-00	5/16" x 2-1/4" Hex Hd Cap Scr.
42	1	767-2002-00	Fuel Tank Cap-Lg UTV-Gas
43	1	763-2006-00	Fuel Guard Filter-750 EFI
44	1	739-3376-60	Team Trans Shift Lever Ext
45	1	764-2004-00	Gear Shift Cable-Large UTV
46	1	710-1038-00	1/4" X 28 Quick Disc. Rod End
47	2	613-8073-00	1/4-20 Nylon Insert Locknut Zinc Orange Nylon
48	1	613-0028-00	1/4-28 Hex Nut
49	1	619-4008-00	1/4 Lock Washer Zinc
50	3	618-8062-50	5/16-18x3/4 Carriage Bolts Black Zinc
51	4	613-9002-00	5/16-18 Hex Flange Nuts Zinc w/Serations
52	1	715-3012-00	Muffler-Kohler 25 EFI & Diesel
53	1	770-1012-00	CVT Driver Pulley-Kohler 25
54	1	770-1014-00	CVT Driven Pulley-Kohler 25
55	1	763-2012-00	Rain Cap- Air Filter
56	1	739-2060-00	Motor/Transmission Bracket
57	7	618-8062-00	5/16-18x3/4 Carriage Bolts Zinc
58	7	613-8047-00	5/16-18 Nylock HEX Nut
59	1	786-2004-00	Fuel Sender
60	1	715-3011-00	Exhaust Mainfild-Kohler 25-29 EFI
61	1	712-3014-00	Exhaust Hdr Gasket-Diesel/Muff
62	1	715-3016-00	Spark Arrestor Kit for Muffler
63	1	726-3233-60	CVT Backplate Stiffener, Kohler EFI
64	1	726-3230-00	CVT Backing Plate, Kohler EFI
65	1	739-2063-00	Motor/Transmission Bracket Upper Brkt-750EFI
66	1	714-3006-00	CVT Cover Kohler 750 EFI
67	9	618-5006-00	1/4 X 5/8 hex head tri-lobe thread forming bolt
68	2	618-2078-00	3/8-16 x 2-3/4 Hex C/S GR 2 Zinc
69	2	619-0057-50	3/8 Flat Washer Black Zinc
70	2	725-3208-00	.75ODx.4IDx.375"L Spacer
71	5	619-8044-00	5/16 USS Flat Washer Zinc
72	1	726-3400-00	Gas Tank Heat Shield Classic & Cew
73	9	630-7040-00	1/4 x 1 Hex Head Tek Screw
74	2	618-6073-00	M8x1.25x20mm Hex Washer Hd MS
75	4	613-8047-50	5/16-18 Nylon Insert Locknut Black Zinc
76	1	739-2066-00	Muffler Rear Mounting Brkt 2015
77	1	739-2067-00	Exhaust Pipe Heat Shield
78	1	618-8065-50	5/16-18 x 1 Carriage Bolt Black
79	1	618-2007-00	5/16-18 x 2-1/2" Carriage Bolt
80	1	739-2065-00	Muffler Heat Shield-Al.

Rear Suspension Assembly

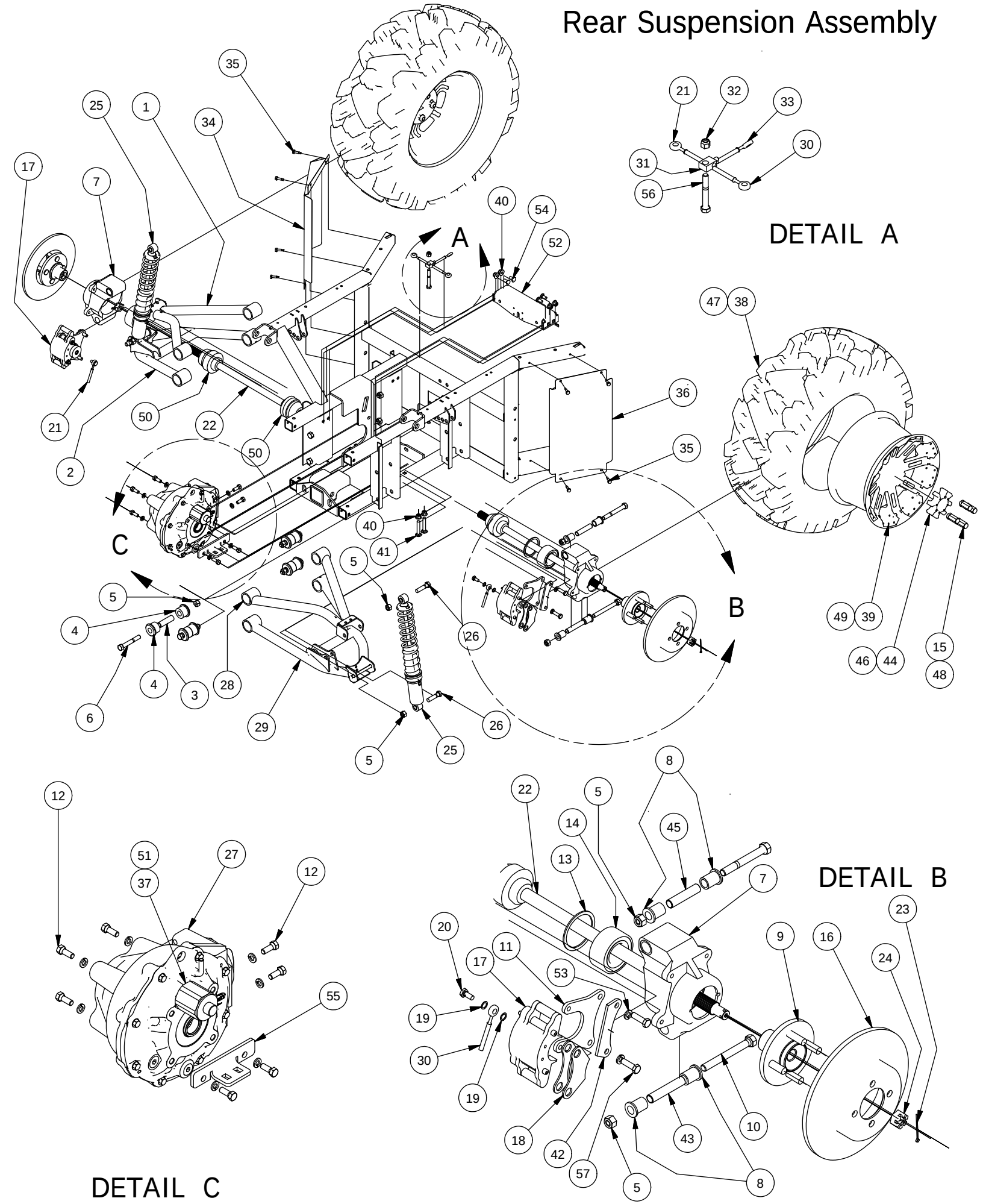

Rear Suspesion Assembly			
ITEM	QTY	PART NUMBER	DESCRIPTION
1	1	787-3210-00	Left Rear Upper A-arm Assy
2	1	787-3212-00	Left Rear Lower A-arm Assy
3	8	732-2001-00	Large MTV A-Arm Bushing Sleeve
4	16	732-2000-00	Large MTV A-Arm Bushing
5	16	613-6037-00	1/2-13 Nylon Insert Locknut
6	8	618-2006-00	1/2" - 13X3-1/2" Hex Bolt Gr 5
7	2	770-1040-00	Independent Rear Suspension
8	8	710-2000-00	Flange BUSHING-Large UTV
9	2	786-2000-00	Hub-Large UTV
10	2	618-2030-00	1/2" -13 x 4.5" Hex Cap Screw
11	2	639-0054-60	Brake Caliper Brkt-Ausco-Elect
12	7	618-6049-00	3/8-16 X 1 GR 5 Hex Bolts Zinc
13	2	710-2003-00	Retaining Ring-Spindle Bearing
14	2	710-2002-00	Spindle Bearing LRG UTV
15	8	613-0001-00	XD4 Lug Nut
16	2	716-2000-00	Rotor - Large UTV
17	2	616-1051-00	Hydraulic Caliper
18	2	616-1056-00	Brake Pad Kit (2 Pads per Kit)
19	4	616-1025-00	10 mm copper crush washer
20	2	616-1015-00	Banjo Bolt M 10mm x 1.0
21	1	716-3008-00	Brake Line Left Rear-Lg UTV
22	2	737-2034-00	Half-Shaft - Rear Large UTV
23	2	765-1016-00	Rear Hub Castle Nut Cotter Pin
24	2	765-1012-00	Rear Hub Castle Nut
25	2	787-2010-00	Rear Shock-Lg. UTV-Gas & Diesel
26	4	618-5049-00	1/2-13 x 2 GR5 Hex Bolt Zinc
27	1	737-3005-00	Rear Differential, Large MTV
28	1	787-3211-00	Right Rear Upper A-arm assy
29	1	787-3213-00	Right Rear Lower A-Arm Assy
30	1	716-3006-00	Brake Line Right Rear-Lg UTV
31	1	716-3010-00	Brake Line Tee-Rear-Lg UTV
32	1	613-5041-00	3/8-16 Nylon Insert Locknut
33	1	716-3004-00	Brake Line-MC to Rear T-Lg UTV
34	1	726-3226-00	Left Rear Fender Well
35	8	630-7040-00	1/4 x 1 Hex Head Tek Screw
36	1	726-3228-00	Right Rear Fender Well
37	1	737-3006-00	Rear Diff Lock Solenoid
38	2	722-4100-00	XD4 Rear Tire
39	2	722-4002-00	XD4 Rear Wheel
40	6	613-5202-00	3/8-16 Nylock Flange Nut
41	2	618-2023-00	3/8"-16 x 2-1/4" Carriage Bolt
42	2	725-3210-60	Caliper Brake Mount Spacer
43	2	725-3026-00	IRS Lower Spacer
44	2	722-4004-00	XD4 Wheel Center Cap
45	2	725-3025-00	IRS Upper Spacer
46	2	722-4110-00	Base Wheel Center Cap
47	2	722-4113-00	Base Rear Tire
48	8	713-1012-50	Open End Lug Nut-Black (Base Model Only)
49	2	722-4007-00	Base Rear Wheel
50	4	712-3222-00	Half Shaft CV Boot Kit
51	1	737-3007-00	Rear Diff Lock Solenoid Spring
52	1	739-3380-00	Rear Diff Cage Top Brace
53	11	619-5037-00	3/8 Lockwasher Zinc
54	4	618-2068-00	3/8 x 3/4" GR 8 Carr Bolts Zinc
55	1	739-3328-60	Right Rear Differential Mount
56	1	618-2078-00	3/8-16 X 2-3/4 Hex C/S GR 2 Zinc
57	4	618-5040-00	3/8-16 x 1-1/4 Hex Bolt GR5

Rops Assembly

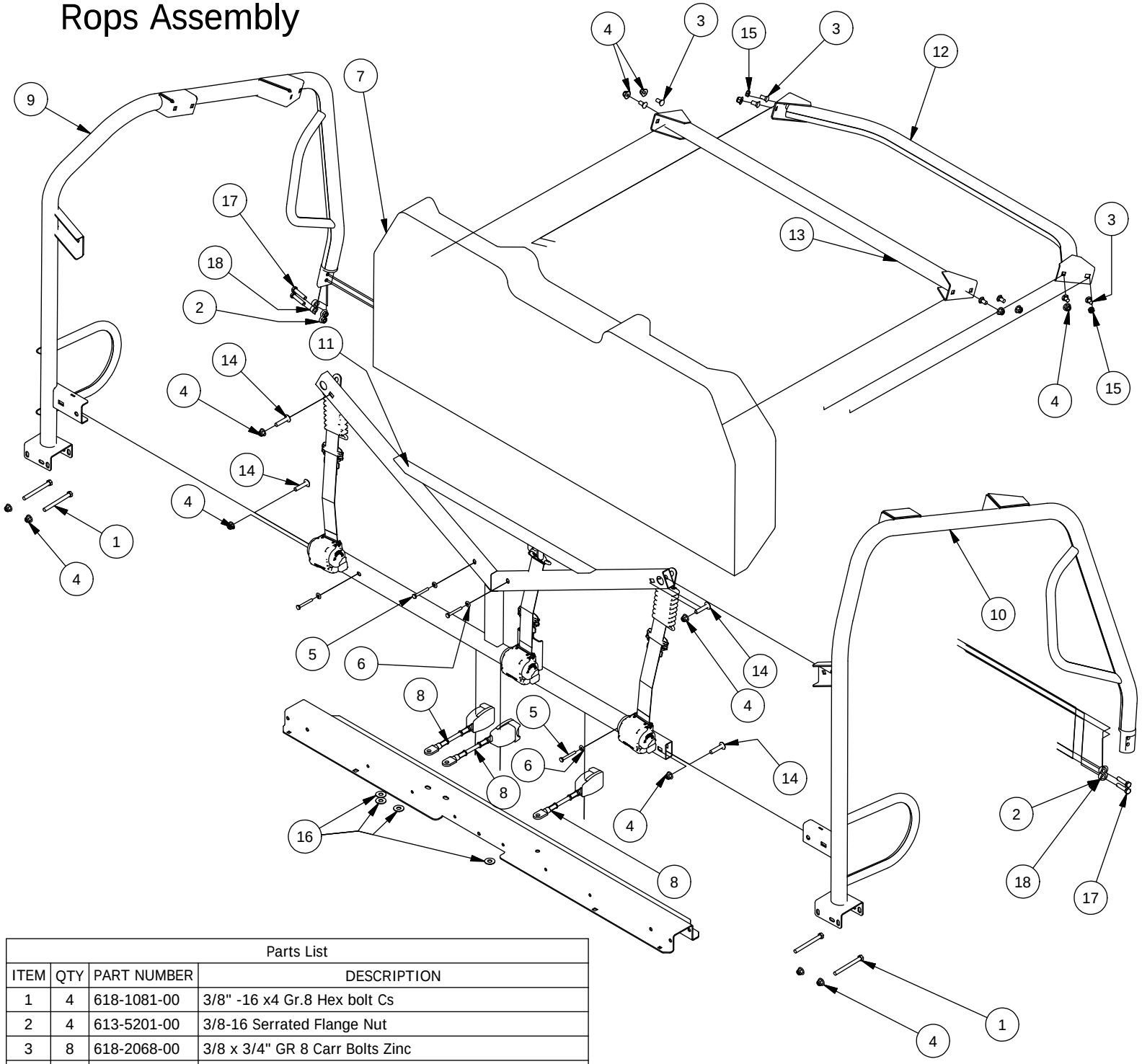

Parts List			
ITEM	QTY	PART NUMBER	DESCRIPTION
1	4	618-1081-00	3/8" -16 x4 Gr.8 Hex bolt Cs
2	4	613-5201-00	3/8-16 Serrated Flange Nut
3	8	618-2068-00	3/8 x 3/4" GR 8 Carr Bolts Zinc
4	14	613-5202-00	3/8-16 Nylock Flange Nut
5	4	618-5005-00	1/4-20 x 1-1/2 Grade 5 Hex bolts Zinc
6	4	619-4008-00	1/4 Lock Washer Zinc
7	1	771-2001-00	Seat Back-Large UTV
8	3	671-0030-00	Seat Belt Latch
9	1	780-3012-00	ROPS Left Hoop Assy
10	1	780-3004-00	ROPS Right Hoop Assy
11	1	780-3002-00	ROPS K Brace Assy For Seat back w/ Integral Headrest
12	1	780-3008-00	ROPS Front Cross Brace Assy
13	1	780-3010-00	ROPS Rear Cross Brace Assy
14	4	618-2048-00	3/8" -16 x 1-3/4" G8 Carriage Bolt
15	2	613-2004-00	3/8"-16 Nyloc Jam Nut
16	4	619-8052-00	7/16 USS Flat Washer Zinc
17	4	618-2008-00	3/8"-16X1-3/4" Gr 8 C/S
18	4	725-3208-00	.75ODx.4IDx.375"L Spacer

Safety Nets Assemblies

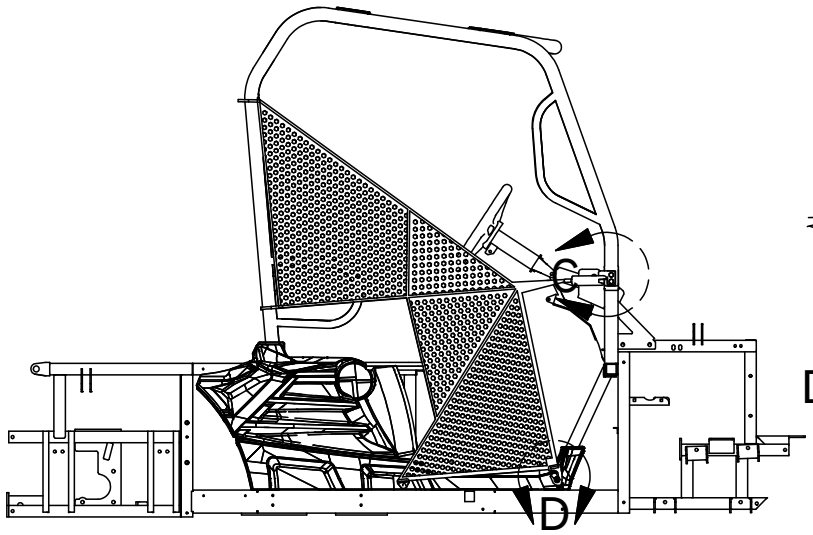

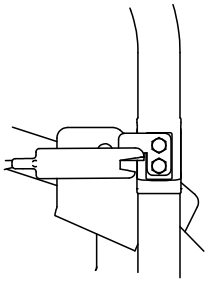

DETAIL C

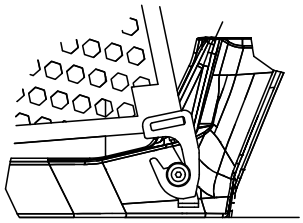

DETAIL D

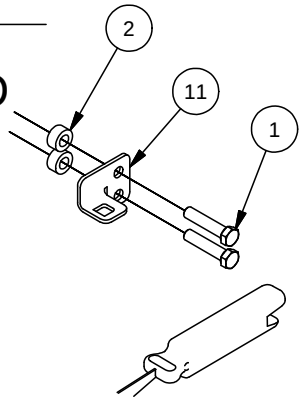

DETAIL A

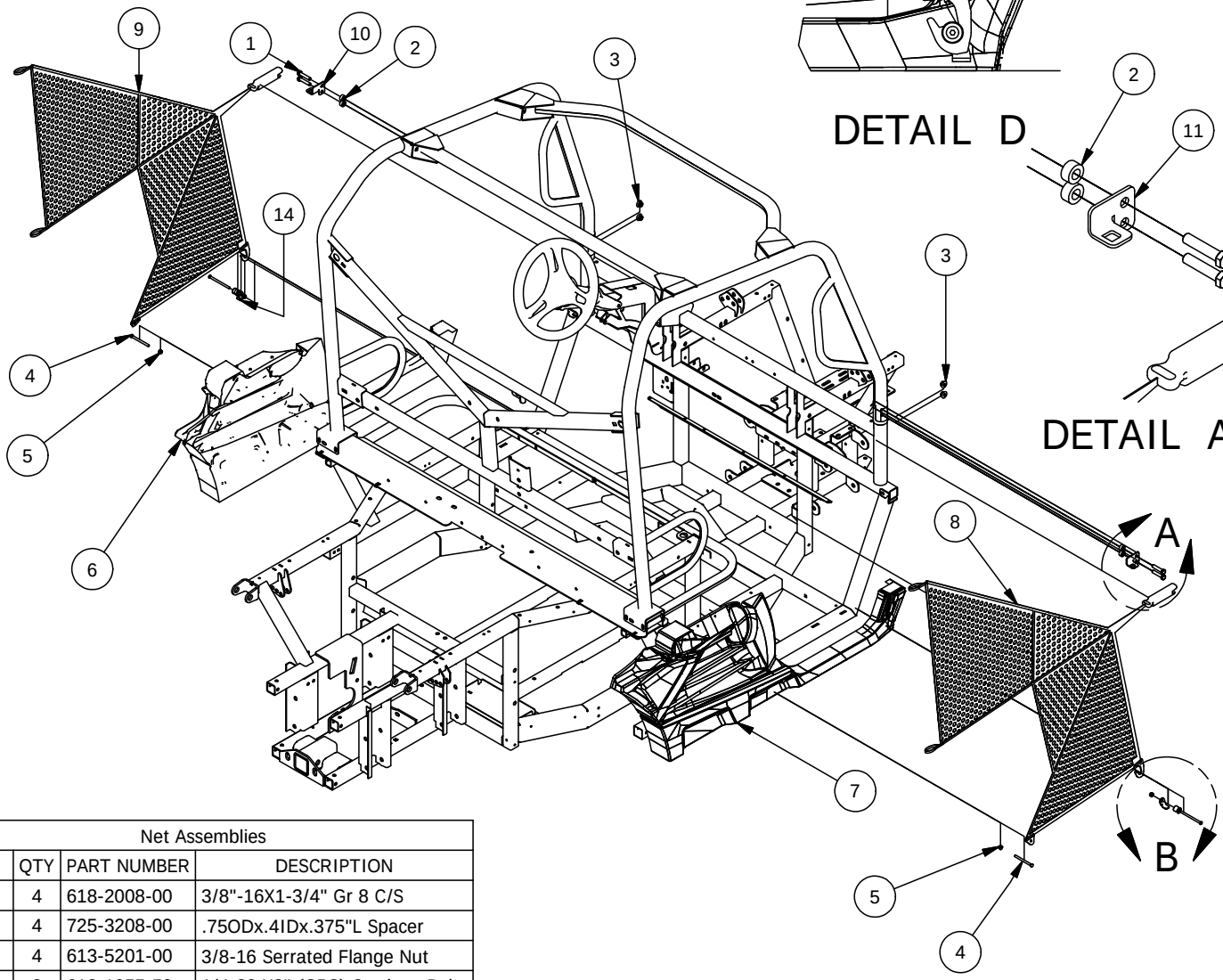

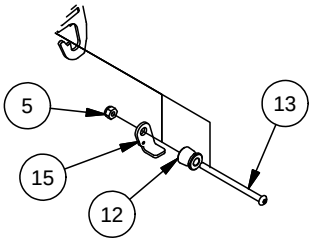

DETAIL B

Net Assemblies			
ITEM	QTY	PART NUMBER	DESCRIPTION
1	4	618-2008-00	3/8"-16X1-3/4" Gr 8 C/S
2	4	725-3208-00	.75ODx.4IDx.375"L Spacer
3	4	613-5201-00	3/8-16 Serrated Flange Nut
4	2	618-1055-50	1/4-20 X3" (GRS) Carriage Bolt
5	4	613-8073-50	1/4-20 Nylon Insert Locknut BL
6	1	780-2030-10	Seat Panel Left-Large UTV-Blk
7	1	780-2025-10	Seat Panel Right-Large UTV-Blk
8	1	771-1006-00	Side Net - Right Side
9	1	771-1004-00	Side Net - Left Side
10	1	739-4420-60	Safety Net Bracket Left
11	1	739-4422-60	Safety Net Bracket Right
12	2	744-1006-00	Side Net Clip Lock Pin
13	2	618-2089-00	1/4-20 X3-1/2" SS Butt Hd Scr
14	1	726-4502-60	Side Net Lower Clip Retainer_L
15	1	726-4503-60	Side Net Lower Clip Retainer_R

Bed Assembly 1

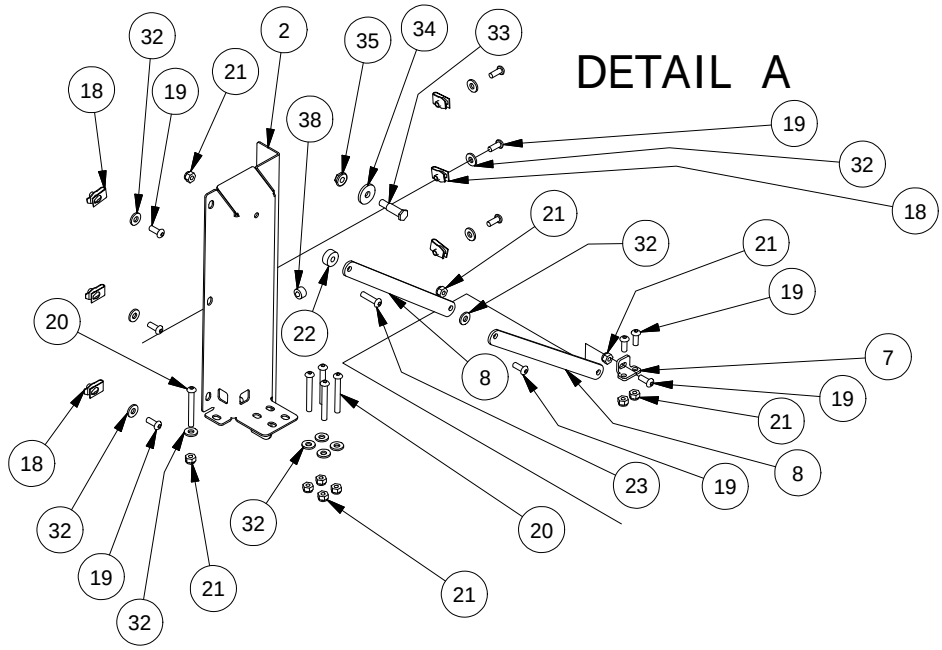

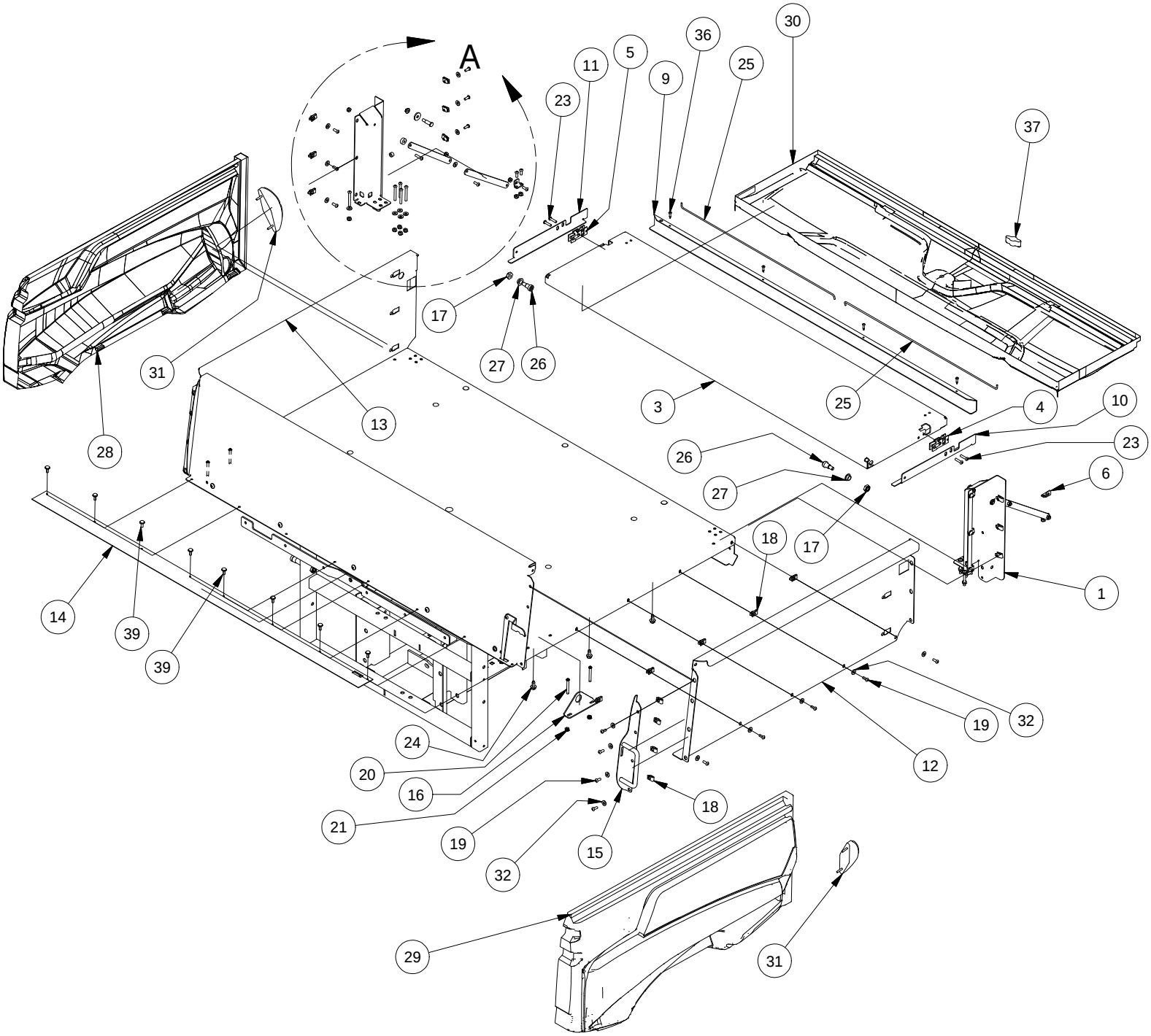

Bed Assembly 1			
ITEM	QTY	PART NUMBER	DESCRIPTION
1	1	703-4008-10	Bed Side Support-Left
2	1	703-4006-10	Bed Side Support-Right
3	1	726-4008-10	Standard Bed Tailgate
4	1	752-1008-00	Tailgate Rotary Latch-Left
5	1	752-1010-00	Tailgate Rotary Latch-Right
6	1	739-4004-60	Tailgate Support Bracket (Left)
7	1	739-4002-60	Tailgate Support Bracket (Right)
8	4	739-4016-60	Tailgate Support Arm-2500
9	1	703-4002-10	Top Tailgate Guard
10	1	703-4014-10	Left TG Side Cover
11	1	703-4012-10	Right TG Side Cover
12	1	726-4004-10	Standard Bed Left Side-Steel
13	1	726-4006-10	Standard Bed Right Side-Steel
14	1	712-3020-00	Bed Dust Seal
15	1	769-4002-00	Dump Bed Handle Assy
16	2	726-5001-00	Tie Down Bracket
17	6	613-0040-00	1/2-13 Nylon Insert Jam Locknut
18	34	613-0054-00	1/4-20 Cage Nut
19	43	618-8064-50	1/4-20 x 5/8 Button Socket C/S
20	14	618-1060-50	1/4-20 X2" Button Hd Black
21	25	613-8073-50	1/4-20 Nylon Insert Locknut BL
22	3	725-4004-00	Spacer, .261 IDx.740 ODx.315 L
23	7	618-2037-50	1/4-20 X1 Button Socket C/S Black
24	6	618-2021-00	5/16" - 18 3/4" Ind Hex Washr Hd - Type F
25	2	735-4000-00	Tailgate Latch Push Rod Left
26	2	618-6062-00	1/2" x 5/8" Soc. Shoulder Bolt
27	2	632-5000-00	1/2 IDx 5/8 x 5/16 OIB Bushing
28	1	780-2065-10	Dump Bed Side-Right-Large UTV
29	1	780-2070-10	Dump Bed Side-Left-Large UTV
30	1	780-2075-10	Tailgate-Large UTV-Black
31	2	786-0014-00	Stop/Tail Light - Large UTV
32	47	619-0010-50	1/4 Flat Washer Black
33	2	739-7000-00	Basket Latch Striker Post
34	2	619-4010-00	1" ODx.307" IDx120 Flat Washer
35	2	613-0031-00	Serrated Flange nut
36	4	630-2030-50	10 x 3/4 Pan Philips Tek Screw
37	1	752-1006-00	Dump Bed Tail gate Actuator
38	2	729-1002-00	Buttom Bumper-Tailgate-2500
39	8	618-2082-00	Push Pin Rivet-Bed Seal

Bed Assembly 2

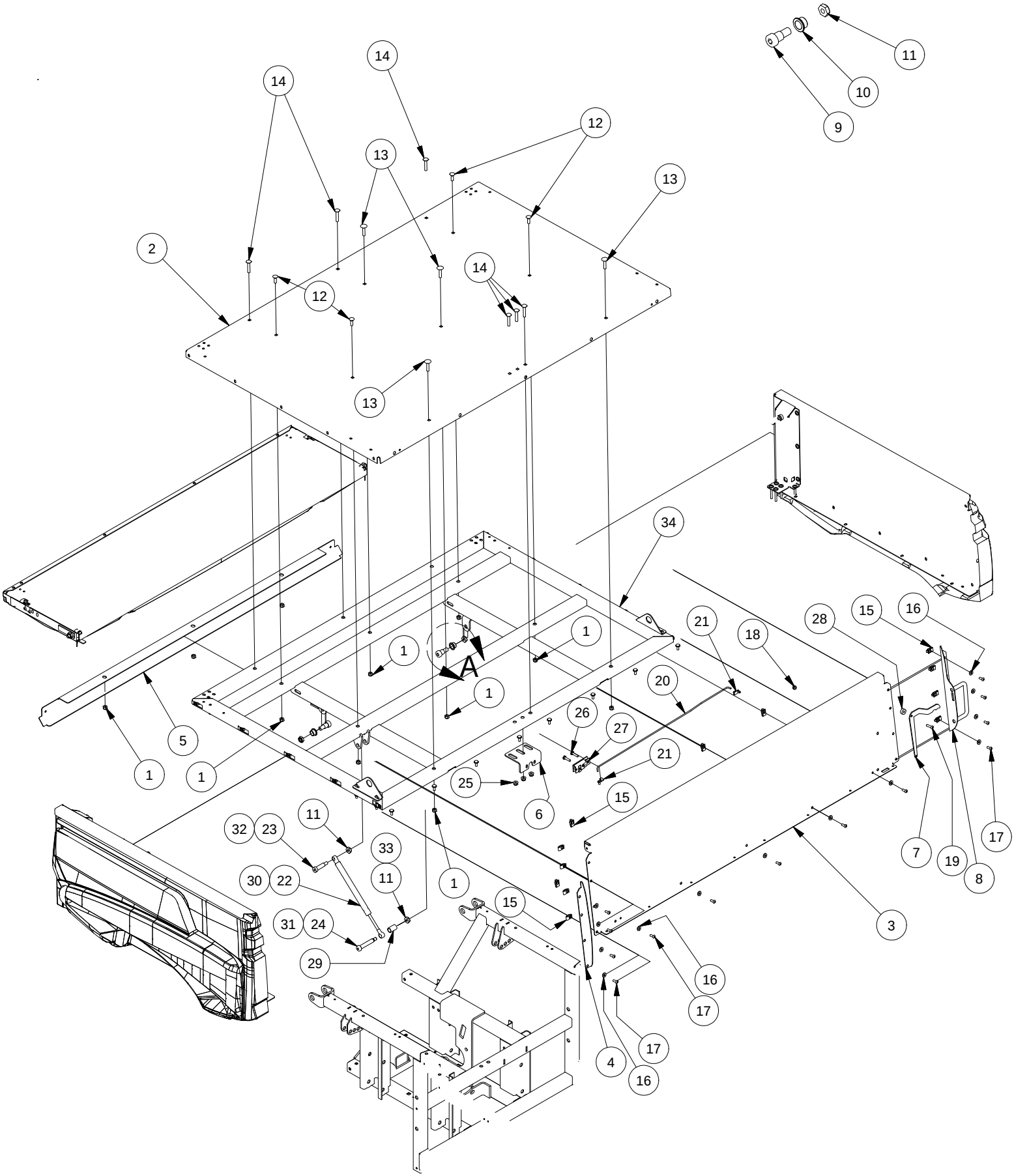

Bed Assembly 2			
ITEM	QTY	PART NUMBER	DESCRIPTION
1	11	613-8047-00	5/16-18 Nylock HEX Nut
2	1	726-4000-10	Srandard Bed Bottom
3	1	726-4002-10	Srandard Bed Front
4	1	703-4009-10	Right Bed Corner Cover
5	1	703-4004-10	Lower Bed Cover
6	1	739-3406-00	Rotary Latch Bracket-Bed (Base Model Only)
7	1	769-4000-00	Dump Bed Actuator Lever (Base Model Only)
8	1	769-4002-00	Dump Bed Handle Assy
9	2	618-3001-00	5/8 x 5/8 Shoulder Bolt
10	2	632-5052-00	Bronze Bushing - SF- 2024-8
11	6	613-0040-00	1/2-13 Nylon Insert Jam Locknut
12	4	618-8065-00	5/16-18 x 1 Carriage Bolt
13	4	618-8060-00	5/16-16 x 1 1/2 Carriage Bolts
14	6	618-4708-00	5/16-18 x 1-3/4 Carriage bolt
15	34	613-0054-00	1/4-20 Cage Nut
16	47	619-0010-50	1/4 Flat Washer Black
17	43	618-8064-50	1/4-20 x 5/8 Button Socket C/S
18	25	613-8073-50	1/4-20 Nylon Insert Locknut BL
19	7	618-2037-50	1/4-20 X1 Button Socket C/S Black
20	1	735-4004-00	Dump Bed Latch Push Rod
21	2	772-7000-00	Latch Push Rod Retainer Clip
22	1	735-2000-00	Dump Bed Gas Spring-Large UTV
23	1	618-2020-00	12"X1-1/2" Shoulder Bolt
24	1	618-2047-00	1/2"x 2-1/2" Shoulder Bolt
25	3	613-8049-00	5/16-18 Nylon Insert Flange Nut Zinc Orange Nylon
26	2	618-4007-00	1/4-20 x 1 Grade 5 Hex bolts Zinc
27	1	752-1004-00	Dump Bed Rotary Latch
28	3	725-4004-00	Spacer, .261 IDx.740 ODx.315 L
29	1	725-1009-00	Pedal Spring Spacer LRG UTV 1-1/8 spacer
30	1	735-2010-00	Dump Bed Actuator-2500 Series (XD4 Models Only)
31	1	618-6068-00	1/2" X 4" Shoulder Bolt (XD4 Models Only)
32	1	618-5049-00	1/2-13 X 2 GR 5 Hex Bolts Zinc (XD4 Models Only)
33	1	613-5202-00	3/8-16 Nylock Flange Nut (XD4 Models Only)
34	1	770-3016-00	Standard Bed Frame Assy

Versabed Assembly (Optional)

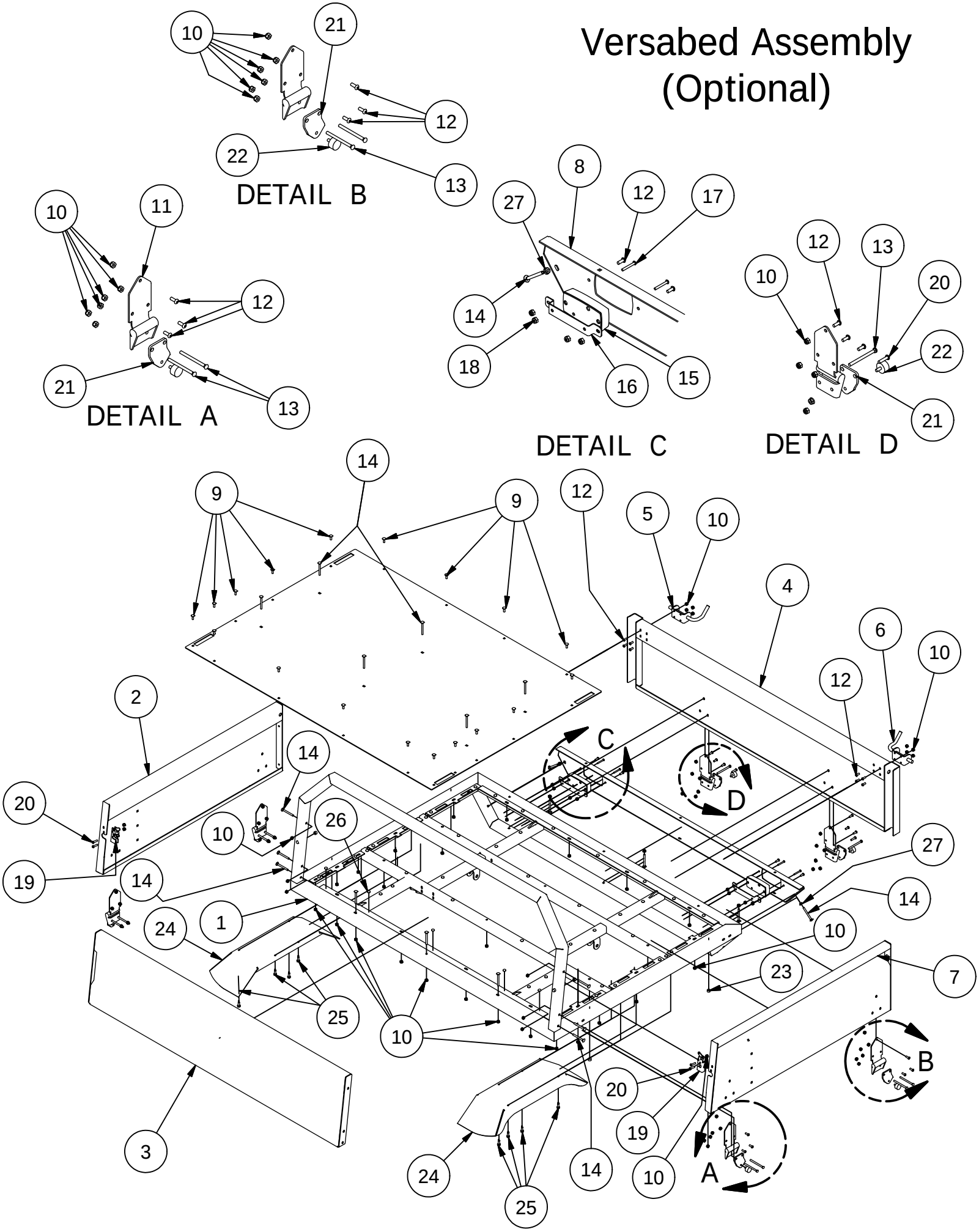

Parts List			
ITEM	QTY	PART NUMBER	DESCRIPTION
1	1	760-1011-00	Short Falt Bed Series Frame Assembly
2	1	760-1005-00	Short Flat BedTruck Right Bed Panel Assy
3	1	760-1008-00	Bed Front Assy
4	1	726-4076-00	Truck Bed Tailgate Panel-AL
5	1	652-6001-00	Door Latch Right
6	1	652-6002-00	Door Latch Left
7	1	760-1003-00	Short Flat Bed Left Bed Panel Assy
8	1	726-4078-00	Truck Bed Taillight Panel-AL
9	18	618-1083-00	1/4-20 x 1" Carriage Bolt
10	83	613-8073-50	1/4-20 Nylon Insert Locknut BL
11	6	753-1012-00	Extended Bed Hinge
12	30	618-8064-50	1/4-20 x 5/8 Button Socket C/S
13	10	618-1055-50	1/4-20 X3" (GRS) Carriage Bolt
14	20	618-2045-00	1/4-20 x 2 1/2 Carriage Bolt
15	2	688-1001-00	Tail/Brake Light Assembly
16	2	739-4460-60	Truck Bed Taillight Bracket
17	4	618-8070-00	10-24 1 1/2 Button Stainless Bolt
18	4	613-5019-00	10-24 Nylon Insert Locknut
19	2	652-6000-00	Door Latch MTV
20	6	618-2037-50	1/4-20 X1 Button Socket C/S Black
21	6	739-4469-00	Truck Bed Side Gate Brkt
22	6	758-1000-00	Rubber Stops
23	8	729-1002-00	Buttom Bumper-Tailgate-2500
24	2	739-4510-00	Intimidator Versa Bed Fender
25	8	630-7040-00	1/4 x 1 Hex Head Tek Screw
26	48	658-6000-00	Self Adheasive Bumper
27	7	613-9001-00	1/4-20 Hex Flange Nuts Zinc W/Serrations

750cc Left

791-2010-00 Orange

791-2010-10 Gray

791-2010-20 O.D. Green

750cc Right

791-2011-00 Orange

791-2011-10 Gray

791-2011-20 O.D. Green

Decal Warning Cluster-2500

791-2030-00

Decal Warning Cluster

Crew-Series

791-2034-00

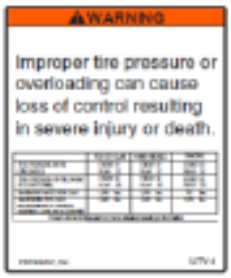

4X4 Left

791-2022-00 Orange

791-2022-10 Gray

791-2022-20 O.D. Green

XD4 Right

791-2025-00 Orange

791-2025-10 Gray

791-2025-20 O.D. Green

4X4 Right

791-2023-00 Orange

791-2023-10 Gray

791-2023-20 O.D. Green

XD4 Left

791-2024-00 Orange

791-2024-10 Gray

791-2024-20 O.D. Green

Dash Intimidator

791-2020-00 Orange

791-2020-10 Gray

791-2020-20 O.D. Green

Tailgate Intimidator

791-2026-00 Orange

791-2026-10 Gray

791-2026-20 O.D. Green

Muffler Hot Warning Label

791-1000-00

E15 Fuel Warning Label

791-1025-00

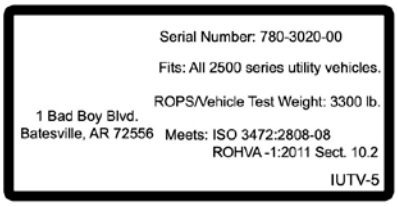

ROPS

791-2096-00

Versabed XD4 Left

780-2032-00 Orange

780-2032-10 Gray

780-2032-20 O.D. Green

Versabed Left

780-2037-00 Orange

780-2037-10 Gray

780-2037-20 O.D. Green

Versabed XD4 Right

780-2033-00 Orange

780-2033-10 Gray

780-2033-20 O.D. Green

Versabed Right

780-2036-00 Orange

780-2036-10 Gray

780-2036-20 O.D. Green

Versabed Tailgate

780-2038-00 Orange

780-2038-10 Gray

780-2038-20 O.D. Green